WASTEWATER

Design and Construction Standards

THOUSAND OAKS

City of Thousand Oaks
Public Works Department
2100 Thousand Oaks Boulevard
Thousand Oaks, California 91360
(805) 449-2400

CITY OF THOUSAND OAKS
UTILITIES DEPARTMENT

WASTEWATER
DESIGN AND CONSTRUCTION
STANDARDS

ADOPTED BY CITY COUNCIL ON MAY 8, 1979

REVISED SEPTEMBER 1980

RESOLUTION NO. 79-156

A RESOLUTION OF THE CITY COUNCIL OF THE CITY OF THOUSAND OAKS APPROVING THE WASTEWATER DESIGN AND CONSTRUCTION STANDARDS

WHEREAS, the City of Thousand Oaks owns and operates a wastewater collection and transmission system; and

WHEREAS, design and construction of wastewater collection and transmission facilities is desired to conform to an established set of standards.

NOW, THEREFORE, BE IT RESOLVED that the City Council of the City of Thousand Oaks hereby approves the revised Design and Construction Standards as presented to City Council on May 8, 1979 with said standards replacing all previous editions.

******

PASSED AND ADOPTED this 8th day of [illegible], 1979.

Donald S. Schur, Mayor
City of Thousand Oaks, California

ATTEST:

Velma S. Quinn, City Clerk
City of Thousand Oaks, California

APPROVED AS TO FORM:

James Longtin, City Attorney

APPROVED AS TO ADMINISTRATION:

Grant R. Brimhall, City Manager

cc: Utilities

I, VELMA S. QUINN, DO HEREBY CERTIFY that the above and foregoing Resolution No.79-156 was duly passed and adopted by the City Council of the City of Thousand Oaks at its regular meeting held on the 8th day of May, 1979 by the following vote, to wit:

AYES: Prince, Horner, Fiore, Schaefer and Schur

NOES: None

ABSENT: None

Velma S. Quinn

Velma S. Quinn, City Clerk
City of Thousand Oaks, California

TABLE OF CONTENTS

1.0 INTRODUCTION AND GENERAL POLICIES 1-1

1.1 SCOPE 1-1
1.2 INTERPRETATION 1-1
1.3 DEFINITIONS AND TERMS 1-1
1.4 APPLICABLE CODES AND POLICY 1-4
1.5 PUBLIC/PRIVATE SEWAGE DISPOSAL 1-4
1.6 UTILITIES DEPARTMENT JURISDICTION 1-5
1.7 DEVELOPER'S ENGINEER'S RESPONSIBILITY 1-5
1.8 REFERENCED SPECIFICATIONS 1-6
1.9 OCCUPANCY/SEWER SERVICE 1-6
1.10 METRIC UNITS 1-6

2.0 DESIGN CRITERIA 2-1

2.1 WASTEWATER CAPACITIES, HYDRAULICS AND SIZES 2-1

A. Quantity of Flow 2-1
B. Hydraulics 2-2
C. Velocity 2-2
D. Oversizing and Extra Depth 2-2
E. Minimum Diameter 2-2
F. VC Pipes 2-2
G. PVC Pipes 2-3
H. ABS Pipes 2-3

2.2 LOCATION OF LINES (STREETS) 2-3

2.3 LOCATION OF LINES (EASEMENTS) 2-3

A. Width 2-4
B. Pipeline Location 2-4
C. Easement Location 2-4
D. Oversizing of Line 2-4
E. Deeds 2-4
F. Easement Provisions 2-4

2.4 SLOPES OF LINES 2-5

A. Minimum Grades 2-5
B. Maximum Grades 2-5
C. Substandard Grades 2-5

2.5 DEPTH OF LINES 2-5

2.6 HORIZONTAL AND VERTICAL CURVES 2-6

A. Curves - VC Pipe 2-6
B. Curves - ABS Composite 2-6
C. Curves - PVC Pipe 2-7
D. Vertical Curves 2-7

2.7 SELECTION OF PIPE MATERIAL 2-8

2.8 MANHOLES 2-8

A. Location 2-8
B. Slope of Manhole Channels 2-9
C. Drop Manholes 2-9
D. Undeveloped Areas 2-9
E. Rim Elevations of Manholes 2-9
F. Design (Size) 2-10
G. Protection 2-10
H. Safety 2-10

2.9 CLEANOUTS 2-10

A. Location 2-10
B. Design 2-10

2.10 SERVICE LATERALS 2-10

A. Size 2-11
B. Depth 2-11
C. Future Connection 2-11
D. Laterals in Cul-de-sac Streets 2-11
E. Backflow Prevention 2-11

2.11 STRUCTURAL REQUIREMENTS 2-12

A. Under Roads 2-12
B. Other Pipes and Structures 2-12
C. Flexible Joints 2-12
D. Steep Grades 2-12

2.12 PRIVATE (RESIDENTIAL) PUMPING SYSTEMS 2-12

2.13 FORCE MAINS AND LIFT STATIONS 2-14

A. Lift Stations Design 2-14
B. Force Mains 2-15
C. Construction of Special Structures 2-15

2.14 INDUSTRIAL WASTE DISCHARGE 2-15

2.15 ABANDONMENT OF WASTEWATER LINES 2-16

3.0 MATERIALS 3-1

3.1 GENERAL REQUIREMENTS 3-1

3.2 TESTING AND FINAL ACCEPTABILITY OF MATERIAL 3-1

3.3 RIGID PIPES 3-1

A. VC Pipe and Fittings 3-1
B. Reinforced Concrete Pipe and Fittings 3-2
C. DI Pipe and Fittings 3-2

3.4 PLASTIC PIPES 3-2

A. PVC Pipe and Fittings 3-3
B. ABS Pipe and Fittings 3-4
C. PE Pipe and Fittings 3-4

3.5 OTHER PIPE MATERIALS 3-5

3.6 PIPE TRENCH MATERIALS 3-5

A. Type A Material 3-5
B. Type B Material 3-5
C. Type C Material 3-5
D. Type D Material 3-6
E. Type E Material 3-6
F. Type F Material 3-6
G. Type G Material 3-6

3.7 SPECIFIC USES OF PIPE TRENCH MATERIALS 3-7

3.8 ROADWAY MATERIALS 3-7

3.9 MANHOLES 3-8

3.10 MANHOLE LIDS 3-9

3.11 CONCRETE MATERIAL 3-9

3.12 REINFORCING STEEL 3-9

A. Bar Reinforcement 3-9
B. Mesh Reinforcement 3-9

4.0 PLAN PREPARATION 4-1

4.1 SHEET SIZE 4-1

4.2 MARGINS 4-1

4.3 SIGNATURE BLOCK 4-1

4.4 COVER SHEET 4-1

4.5 PLAN OF WASTEWATER SYSTEM 4-3

4.6 PROFILE OF WASTEWATER SYSTEM 4-3

4.7 GRAPHIC SCALE AND NORTH ARROW 4-3

4.8 PROCEDURE FOR APPROVAL 4-4

4.9 PLAN CHECKING LIST 4-4

4.10 STANDARD LANGUAGE FOR DEDICATION OF FACILITIES TO CITY 4-5

4.11 STANDARD NOTES 4-6

5.0 FEES AND REQUIREMENTS FOR AUTHORIZATION OF CONSTRUCTION 5-1

5.1 PLAN CHECK FEE 5-1

5.2 SUBMITTAL OF BLUELINE PRINTS 5-1

5.3 SPECIAL PROVISIONS 5-1

5.4 INSPECTION FEE 5-2

5.5 EASEMENTS 5-2

5.6 AGREEMENTS, BONDS AND INSURANCE CERTIFICATE 5-2

5.7 APPROVAL FOR CONSTRUCTION 5-3

5.8 CONNECTION CHARGE 5-3

5.9 SPECIAL CHARGES 5-3

6.0 CONSTRUCTION STAKING 6-1

6.1 GENERAL REQUIREMENTS 6-1

6.2 PRESERVATION OF STAKES 6-1

6.3 SERVICE LATERALS 6-1

6.4 AS BUILT 6-1

7.0 CONSTRUCTION 7-1

7.1 GENERAL REQUIREMENTS 7-1

A. Quality of Materials 7-1
B. Substitutions 7-1
C. Quality of Workmanship 7-1
D. Defective Work 7-1
E. City Inspection, Field Acceptance & Guarantee Period 7-2
F. Public Relations 7-2
G. Television Inspection 7-2

7.2 PERMITS 7-3

A. Encroachment 7-3
B. Explosives 7-3

7.3 CLEARING AND GRUBBING 7-3

A. General 7-3
B. Removal and Disposal of Material 7-3
C. Oak Tree Ordinance 7-3

7.4 UTILITIES, EXISTING FACILITIES AND CONCRETE REMOVAL 7-3

A. Abandonment 7-3
B. Utilities and Existing Facilities 7-3
C. Concrete, Masonry, or Mortared Construction Removal 7-4

7.5 EXCAVATION AND TRENCHING 7-4

A. General 7-4
B. Excavation 7-5
C. Trench Width and Grade 7-5
D. Shoring 7-5

7.6 PIPE BEDDING AND LAYING 7-6

A. General 7-6
B. Installation of Flexible (PVC or ABS Solid Wall) Pipes 7-7
C. Installation of ABS Composite Pipe 7-8

7.7 BACKFILL AND COMPACTION 7-8

A. General 7-8
B. Backfilling Rigid Pipes 7-9
C. Backfilling PVC, ABS Solid Wall or Composite Pipes 7-9
D. Final Backfill 7-10

7.8 BORING AND JACKING OPERATIONS 7-10

A. General 7-10
B. Bores 7-11
C. Jacked Steel Casings 7-11

7.9 RESURFACING AND RESTORATION 7-11

7.10 CONCRETE AND MORTAR WORK 7-12

A. Concrete 7-12
B. Mortar 7-12

7.11 MANHOLE BASES 7-12

7.12 MANHOLES 7-13

A. General 7-13
B. Assembly of Precast Manholes 7-13
C. Adjustment to Street Grade 7-14
D. Transitions, Flow Channels 7-14
E. Other Requirements 7-14

7.13 CLEANOUTS 7-14

A. General 7-14

7.14 SERVICE LATERALS 7-14

A. General 7-14
B. Residential House Laterals 7-15
C. Laterals from Certain Commercial and Industrial Premises 7-15
D. Deep Laterals or Chimneys 7-15
E. Backflow Protection 7-15

7.15 SAFETY 7-15

7.16 CLEANING OF SEWERS 7-16

8.0 ABANDONMENT 8-1

8.1 GENERAL 8-1

8.2 WASTEWATER LINES 8-1

8.3 STRUCTURES 8-1

8.4 SALVAGED MATERIALS 8-1

9.0 TESTING 9-1

9.1 WASTEWATER LINES 9-1

A. Air Test 9-1
B. Leakage Test 9-2
C. Pipe Diameter Ring Deflection Test of ABS and PVC Pipe 9-2

9.2 BACKFILL MATERIALS 9-3

A. Gradation Curves and Sand Equivalency Determination 9-3

9.3 COMPACTION TESTS 9-3

9.4 TELEVISION INSPECTION 9-4

10.0 WASTEWATER SYSTEM AND WORK AREA CLEAN UP 10-1

10.1 CLEANING OF SEWERS 10-1

10.2 FINAL PROJECT CLEAN UP 10-1

11.0 REQUIREMENTS FOR FINAL ACCEPTANCE 11-1

11.1 FIELD ACCEPTANCE 11-1

11.2 AS BUILT ORIGINALS 11-1

11.3 WASTEWATER CONNECTION FEES 11-1

11.4 ON-SITE PLUMBING FIXTURE PLANS 11-1

11.5 NOTICE OF COMPLETION 11-2

11.6 GRANT DEED 11-2

11.7 ITEMIZED COST/ADDITIONAL FEES 11-2

11.8 APPROVAL FOR ACCEPTANCE 11-2

1 – Introduction & General Policies

SECTION 1.0

INTRODUCTION AND GENERAL POLICIES

1.1 SCOPE

The design and construction of wastewater mains and other appurtenances in the City of Thousand Oaks shall comply with these standards herein called "Wastewater Design and Construction Standards," or the permit requirements of various governing bodies, except where specific modifications have been approved, in writing, by the Director of Utilities. All submitted plans shall be signed by a registered civil engineer and all work shall be in accordance with good engineering practice. This document sets forth the procedure for designing and preparing plans and specifications for wastewater systems built for the City. Wherever there are differences between these standards and other county, state or federal regulations, the most stringent or highest requirement shall govern.

1.2 INTERPRETATION

The Director of Utilities shall decide all questions of interpretation of "good engineering practice" being guided by "Design and Construction of Sanitary and Storm Sewers" (ASCE Manual of Engineering Practice No. 37 or WPCF Manual of Practice No. 9) both prepared by joint committees of the American Society of Civil Engineers and the Water Pollution Control Federation.

1.3 DEFINITIONS AND TERMS

Whenever in these specifications or in any documents or instruments where these specifications govern, the following terms, abbreviations or definitions are used, the intent and meaning shall be interpreted as follows:

Abbreviations

AASHTO - American Association of State Highway and Transportation Officials

ACI - American Concrete Institute

ANSI - American National Standards Institute

ASCE - American Society of Civil Engineers

ASTM - American Society for Testing and Materials

AWWA - American Water Works Association

UBC - Uniform Building Code

UPC - Uniform Plumbing Code

WPCF - Water Pollution Control Federation

Pipe Types:

ABS - Acrylonitrile Butadiene Styrene

AC - Asbestos Cement

CI - Cast Iron

CMP - Corrugated Metal Pipe

DIP - Ductile Iron Pipe

PE - Polyethelene

PVC - Poly-Vinyl Chloride

RC - Reinforced Concrete

VC - Vitrified Clay

Definitions

"Approved"	Unless specifically otherwise indicated this shall mean approval by the Director of Utilities.
"City"	The City of Thousand Oaks, California
"County"	The County of Ventura, California
"Developer"	An individual or organized group, partnerships, corporations, etc. proposing to subdivide or improve land which will contribute sewage to the City's system.
"Developer's Engineer"	The engineer licensed by the State of California as a civil engineer, employed by developer, under whose direction plans, profiles and details for the work are prepared and submitted to the City for review and approval.
"Director"	Director shall mean the Director of Utilities of the City, or the person(s) engaged by the City

"Director" - Cont.	and authorized to perform the duties assigned to the Director of Utilities, and shall include his deputies and representatives.
"Easement"	A recorded document in which the land owner gives the City permanent rights to construct and maintain a sewer across private or other property.
"Engineer"	A professional engineer or firm of professional civil engineers appointed by and acting for the Utilities Department.
"Fixture Unit"	The unit equivalent of plumbing fixtures as tabulated in the Uniform Plumbing Code.
"House Sewer" or "Building Sewer"	A sewer on private property connecting a building with the lateral on public property at the lot line.
"Service Lateral"	A service sewer in a public street or easement connecting a house or building sewer to the street or main sewer.
"House Plumbing"	Plumbing fixtures, devices and drainage piping within a building or structure, contributing wastes to the City's sewers.
"Inspector"	An employee or agent of the City engaged to observe and record field compliance with design criteria, plans, and construction standards.
"Offsite" or "Off-Tract Sewer"	A sewer beyond tract boundaries connecting the tract sewer with the City's system.
"Plans"	Drawings of sewers or appurtenances to be.
"Plate No."	Where not specified to the contrary, this refers to plates attached to these standards.
"Required"	Unless specifically otherwise indicated, this shall mean a requirement of the Utilities Department.
"Sewage"	Wastewater being transported or treated by the wastewater system.

"Tract Sewers"	The system of street sewers, house laterals, and manholes constructed by a developer within an approved tract.
"Trunk Sewer"	A main sewer which receives flow from tracts and other collecting sewers.
"Utilities Department"	The department established by the City to administer the water and sewer systems.
"Utilities Engineer"	A registered civil engineer employed by the City and designated by the Director.
"Sewer" or "Sewerage"	Wastewater main or wastewater

1.4 APPLICABLE CODES AND POLICY

A. Ordinances, requirements and applicable standards of governmental agencies having jurisdiction within the City's service area shall be observed in the design and construction of sewers. Such requirements include but are not limited to current revisions of the following:

1. The Uniform Building Code as amended by Building and Safety Department, City of Thousand Oaks.

2. The Uniform Plumbing Code as amended by Building and Safety Department, City of Thousand Oaks.

3. Municipal Code of the City of Thousand Oaks (Note: Title 10, Chapter 1 is titled "Utilities - Sewage Disposal").

4. Road encroachment regulations of the City of Thousand Oaks and the County of Ventura.

5. Standard Specifications - State of California Business and Transportation Agency, Department of Transportation Standard Specifications, current edition (CALTRANS).

A complete listing of all reference material is included in the back of these standards.

1.5 PUBLIC/PRIVATE SEWAGE DISPOSAL

As required by the Municipal Code, which should be referred to for a complete explanation, a public sewer connection is required where any one or more of the following situations exist:

A. "... any part of a parcel of property is situated within 300 feet from an accessible public sewer."

B. "... the Council declares a private disposal facility to be a public nuisance."

C. There is a change of ownership and a public sewer is accessible.

D. All new developments (except single family dwellings) not included in a new subdivision and greater than 300 feet away from a public sewer.

Also, connections of any cesspool seepage pit or septic tank or any other private disposal system to any sewer main line or service lateral is strictly prohibited.

1.6 UTILITIES DEPARTMENT JURISDICTION

The Utilities Department is responsible for the approval of plans and inspection of all public main wastewater lines and laterals within the public right-of-way. The Building and Safety Department, City of Thousand Oaks is responsible for all laterals on private property. Where repairs or replacement of a lateral is required subsequent to initial construction, it shall be the responsibility of the property owner, including that section between the main sewer and the property line, unless otherwise approved.

1.7 DEVELOPER'S ENGINEER'S RESPONSIBILITY

These standards establish uniform policies and procedures for the design and construction of the City wastewater system. They are not intended to be a substitute for engineering knowledge, judgment, or experience. The contained procedures shall be reviewed by the developer's engineer and shall be applied as necessary to the project. Proposed deviations to these standards shall be submitted, in writing, prior to tentative map and/or development project approval.

It is the developer's engineer's responsibility to be aware of the City's Master Plan for wastewater and to indicate any mainline relocations, extensions, or oversizing on the tentative tract map. This responsibility shall include investigating any changes from the Master Plan necessitated by development subsequent to the Master Plan, although the above shall not relieve the developer from the responsibility to provide an approved system consistent with Utilities Department requirements. Verification of the adequacy of the downstream wastewater system or of the surrounding water system rests jointly with the Utilities Department and the developer.

All plans, specifications, reports or documents shall be prepared by a registered civil engineer, or by a subordinate employee under his direction, and shall be signed by him and stamped with his seal to indicate responsibility for them.

A "Preliminary Review" and/or "Plans Approved for Construction" stamp of the City on the plans does not in any way relieve the developer's engineer of his responsibility to meet all requirements of the City. The plans shall be revised or supplemented at any time it is determined that the City's requirements have not been met.

1.8 REFERENCED SPECIFICATIONS

References to standards such as ASTM shall refer to the latest edition of such standards unless otherwise specified.

1.9 OCCUPANCY/SEWER SERVICE

As a part of the clearance procedure for individual house/building occupancy, the Utilities Department must "clear" the house/building. Such clearance is given after City Council acceptance of the work, unless waived, and in no event can it be granted until after field acceptance of the work by the inspector.

2 – Design Criteria

SECTION 2.0

DESIGN CRITERIA

2.1 WASTEWATER CAPACITIES, HYDRAULICS AND SIZES

A. Quantity of Flow: Sewage flows shall be determined from maximum potential population of the tributary area. Unless otherwise approved, the following criteria shall be used:

If the number of housing units is known:

3.64 persons/single family unit	100 gallons/capita/day (gpcd) 379 liters/capita/day (lpcd)
2.15 persons/multiple family dwelling	100 gallons/capita/day (gpcd) 379 liters/capita/day (lpcd)

If the number of units is not known:

Table 1

Type of Zoning	Ground Slope	Persons Per Acre (Per Hectare)	Computed Average Flow
Residential	0-0.10	12.5 (5.1)	100 gpcd (379 lpcd)
Residential	0.10-0.25	7.0 (2.8)	100 gpcd (379 lpcd)
Residential	Over 0.25	1.0 (0.5)	100 gpcd (379 lpcd)
General Commercial	0-0.10	---	3870 gal./acre/day (36,200 liters/hectare/day)
Limited Commercial	0-0.10	---	3870 gal./acre/day (36,200 liters/hectare/day)
Hospital	Any	---	2.5×10^5 gal./acre/day (2.3×10^6 liters/hectare/day)
School	Any	---	4000 gal./acre/day (37400 liters/hectare/day)

Type of Zoning	Ground Slope	Persons Per Acre (Per Hectare)	Computed Average Flow
Light Industry	0-10	---	5160 gal./acre/day (48,200 liters/hectare/day)
Other Industry	Any	---	Varies*

*Contact Director for approval of values.

After calculating the average flow, a peak factor shall be determined by Ratio of Peak to Average Flow Chart shown on Standard Plate No. 2.

An additional amount for infiltration shall be added when a sewer is to be constructed below the ground water level. This amount shall be approved by the Director.

B. Hydraulics: Sewers shall be designed to accommodate future tributary flows, in addition to those from the project. Pipe capacities shall be determined for peak flow rates by Manning's Formula using an "n" value of 0.013 for all pipelines. Sewers less than 12" (300mm) in diameter shall be designed to flow half full at peak flow rates. Sewers 12" (300mm) and larger shall be designed to flow two-thirds at peak flow rate.

C. Velocity: A main line sewer shall be designed to provide a mean velocity of not less than two (2) feet (0.61m/sec.) per second flowing one-half full except that the Director may approve a gradient that will develop a velocity of less than two (2) feet (0.61m/sec.) per second in unusual circumstances. Where there is conflict between design by velocity and design using minimum slopes in section 2.4, the design resulting in the steepest slope shall be used.

D. Oversizing and Extra Depth: Oversizing of certain tract sewers may be required where such sewers can logically serve an upstream tributary area.

E. Minimum Diameter: The minimum diameter for wastewater main shall normally be 8 inches (200mm).

F. VC Pipes: VC sewer pipe shall be furnished in lengths not exceeding 6 feet (1.8m) without approval. The developer's engineer should be familiar with the "Clay Pipe Engineering Manual" as published by the National Clay Pipe Institute (August 1978 edition or as revised).

G. PVC Pipes: PVC sewer pipe shall not be greater than 15 inches (375mm) in diameter and shall be furnished in standard lengths not exceeding 20.0 feet (6.10m). Use of 15-inch pipe requires special approval.

In addition, the developer's engineer should be familiar with the "Design and Construction Handbook of PVC Pipe" as published by the Uni-Bell Plastic Pipe Association (1977 edition or as revised).

H. ABS Pipes: ABS sewer pipe shall not be greater than 15 inches (375mm) in diameter and shall be furnished in standard lengths not exceeding 14 feet (4.3m). The developer's engineer should be familiar with "Truss Pipe Semi-Rigid Sewer Pipe System Design Manual," as published by Armco Steel Corp. Use of 15-inch pipe requires special approval.

2.2 LOCATION OF LINES (STREETS)

The sewer centerline, wherever possible, shall be located in public streets parallel to and 5 feet (1.5m) south or east of the street centerline.

However, where storm drains are in the center of the street, the water or wastewater lines should be located to provide a minimum of 4 feet (1.2m) clearance between the outsides of pipe (measured on a horizontal plane). This pertains as well to any case of paralleling lines.

Special care is required where storm drains or other pipes cross above flexible pipes to avoid deflection problems when the other lines are installed.

When an area outside the improvements can be logically served by future extension of the sewer, it shall extend to the improvement boundary or to the end of a paved street in a manner facilitating future extensions.

2.3 LOCATION OF LINES (EASEMENTS)

Easements should be avoided where a reasonable alternate solution exists. Unless there are either physical limitations or extreme economic penalties, wastewater lines should be installed within streets. When easements are required, there shall be careful consideration of how the line is to be maintained and/or replaced, if necessary. Where easements are necessary and where the side slope (perpendicular to the pipe) exceeds 50 percent (1 vertical to 2 horizontal) then the plans shall clearly indicate appropriate contours within the easement.

In general, all manholes within easements shall be accessible by conventional maintenance vehicles traveling over paved roads or driveways unless otherwise approved. Thus manholes within private property are discouraged and subject to special approval, unless the above can be met.

Laterals should not be connected to a main line within an easement unless specifically approved. This is to avoid root intrusion into the main via the lateral. Specifically, laterals should not be connected into the main where such a tie-in would be between or adjacent to a structure.

A. Width: Wastewater easements for pipes up to 15 inches (375mm) in diameter should normally be a minimum of 15 feet wide (4.6m). However, additional easement width shall be required where the depths of pipe exceed 15 feet (4.6m) or as deemed necessary. The plans should clearly indicate any known block walls, pavement, trees or other obstructions within a proposed easement. Such items are contrary to Utilities Department policy and require special approval. Included with such approval may be a monetary obligation towards the operation and maintenance of the wastewater line within the easement; also, the "as-built" drawings shall indicate such approval.

B. Pipeline Location: Pipelines shall generally be placed in the center of easements; only in unusual circumstances will a line be approved which is closer than 5 feet (1.5m) from the easement edge. Unless specifically otherwise approved, the line shall be straight without horizontal bends or deflections.

C. Easement Location: The full easement width shall be on one lot or property in such manner that access to manholes will not be obstructed by walls, trees or permanent improvements. Where this requirement cannot be met without interfering with existing buildings, easements may straddle lot lines providing approval is received and the sewer is not located on the lot lines.

D. Oversizing of Line: If a wastewater line within an easement is over 15 feet (4.6m) deep, Utilities Department may require the oversizing (such as from an 8 inch (200mm) line to a 10 inch (250mm) line) to facilitate future slip lining.

E. Deeds: Deeds for easements shall provide for restrictions of permanent construction within easement to provide ingress and egress for maintenance.

F. Easement Provisions: Easements shall be provided as follows:

1. For subdivision tracts - The owners of land included within the subdivision shall offer to dedicate, for public use, the wastewater (sewer) easements so designated on the final map. Standard language is included in Section 4.10.

2. For other than subdivision tracts - Dedication of sewer rights of way shall occur by means of deeds of conveyance to the City of Thousand Oaks for all dedications other than those dedications created by subdivision tract maps on a form and as approved.

2.4 SLOPES OF LINES

Minimum slope requirements are necessary to assure self-cleaning and self-oxidizing velocities to avoid significant generation of hazardous, odorous, and corrosive sulfur compounds. Where possible, use of the minimum slopes should be avoided and should not be construed as guidelines for system design.

A. Minimum Grades: The minimum grades for commonly used pipe sizes shall be as follows:

Pipe Size	V=2.0 ft/sec Foot per Foot
8"	.0044*
10"	.0036
12"	.0024
15"	.0016
18"	.0014
21'	.0010

*Unless physically or economically unattainable, the slopes for 8 inch lines should be above 0.0060 with a predominance of slopes above that value.

B. Maximum Grades: The maximum grade for sewers shall normally be 15 percent except in steep terrain where the sewer grade may approximate the finished grade over the sewer. In no case shall the grade exceed 45 percent without special approval. Prior to the design of any sewer on a slope over 15 percent, Section 2.11 and Plates 14 through 16 should be referred to for typical details. To minimize the turbulence in manholes, the grade of any incoming sewer shall not exceed the grade of the outgoing sewer by more than 10 percent. Where this value is exceeded, the designer should check the hydraulic considerations and pay particular attention to the invert drop across the manhole. Refer to Section 2.11 for further discussion of steep grades.

C. Substandard Grades: If grades below the standard minimum must be used in order to avoid pumping, the designer shall advise the Utilities Department before proceeding with design. Grades below the standard minimum may be used only upon specific approval (with approval designated on the improvement drawings), solicited well in advance of completion of design.

2.5 DEPTH OF LINES

Depth of cover is measured as the distance to the top of pipe from the finished grade surface over the sewer centerline.

Sewers shall be installed at a depth which shall provide suitable service to the properties connected and will allow subsequent installation of water lines, in accordance with the Water/Wastewater Separation Plate No. 30.

A. Standard depth of cover is 7 feet (2.14m) in paved areas or 5 feet (1.5m) minimum in areas not expected to receive traffic. Where this cover cannot be maintained, other details may be required, such as higher strength pipe, pipe encasements, special backfill, or concrete trench slabs. Whereas depths of cover less than 7 feet require approval via the plan check process and are discouraged, the use of concrete encasements or trench slab will in general be reserved for depths of cover below 5 feet in paved areas and 3 feet in non-traffic areas.

B. Maximum depth of cover shall be as detailed in Plates 10 and 11.

C. Designs not in accordance with standard depths shall be submitted to the Director for prior approval.

2.6 HORIZONTAL AND VERTICAL CURVES

In curved streets, the sewer shall follow the street curvature, but not crossing the centerline. In general, vertical plus horizontal curves will not be allowed between manholes unless it is demonstrated that another solution is not reasonably feasible. Vertical curves should not be used unless excessive extra depth of excavation would be otherwise incurred.

Allowable joint deflections shall be the more stringent of those set forth below and the manufacturer's recommendations.

A. Curves - VC Pipe: Joint deflections for curved wastewater lines which are VCP shall conform to the following (based upon ASTM C-425):

Table 2

Nominal Pipe Size Inches	Max. Allow Deflection in/ft (Angle)	Minimum Radius of Curvature in Feet Without Using Deflection Couplings For Pipe Length, L, of 2'	3'	4'	5'	5½'	6
6 to 12	½" (2.4°)	48'	72'	96'	120'	132'	144'
15 to 24	3/8" (1.8°)	64'	96'	128'	160'	176'	196'

B. Curves - ABS Composite: Pulling of joints to achieve curvature shall be limited as follows:

Table 3

Pipe Size Inches	Allowable Play In Coupling	Minimum Radius of Curvature in Feet			
		12.5' Length No Fittings	6.25' Length No Fittings	12.5' Length 3° Defl. Fitting	6.25' Length 3° Defl. Fitting
8"	$+1.9^{o}$	400'	200'	110'	55'
10"	$+1.5^{o}$	500'	250'	130'	65'
12"	$+1.25^{o}$	600'	300'	140'	70'
15"	$+1.0^{o}$	750'	375'	160'	80'

No bevelling of pipe ends will be allowed. Pipe lengths shown above are preferred over cutting odd-lengths to obtain a specific radius.

C. Curves - PVC Pipe: Except for perhaps 4 inch (100mm) and 6 inch (150mm) diameter PVC pipe, deflection at the joints is very limited due to the joint design. Curvature can be obtained by bending the pipe along its length within the trench. Bevelling pipe ends will not be allowed. The following table should be used as a basis for curvature:

Table 4

Pipe Size Inches	Minimum Radius of Curvature in Feet
6"	175'
8"	225'
10"	275'
12"	325'
15"	400'

The above values are independent of pipe length since curvature is not achieved through joint deflection. Curves with smaller radii require deflection fittings or smooth curve "sweeps."

D. Vertical Curves: Vertical curves in sewers shall conform to the requirements for horizontal curves except that the radius shall not be less than 400 feet (122m). Vertical curves may be either circular or parabolic in profile. An approximate formula for determining the required minimum length of a parabolic curve is:

$L = R\ (S_1 - S_2)$ where

L = minimum length of curve

R = minimum radius of curve permitted

S_1 and S_2 are the two sewer grades being used, with S_1 being the steeper grade.

2.7 SELECTION OF PIPE MATERIAL

The designer is referred to section 3.3 and 3.4 Materials, for discussion of the subject.

2.8 MANHOLES

The maximum distance between manholes shall be 400 feet (122m) from centerline to centerline. Although the approved distance for any particular reach may be modified by the items listed below. Brick and mortar blockouts for future extensions are preferred over stub and capped pipes except where the exact orientation and slope of the future extension is known at the time of plan submittal.

Unless otherwise approved, all manholes should be accessible to standard maintenance vehicles. Therefore, manholes placed in back or side yards will not normally be approved. Every reasonable effort should be made to provide a paved or gravel roadway to manholes in open space areas.

Section 3.9 Materials, discusses appropriate manhole materials.

A. Location: Manholes shall be located at the following:

1. At all abrupt grade changes (too large for a vertical curve)

2. At all changes in horizontal alignment (except on curves)

3. At all changes in pipe sizes

4. At the terminal end of all lines exceeding 200 feet (60m) in length from the next downstream manhole. Manholes will be required in cul-de-sacs which have three (3) or more fronting lots.

5. At all junctions of main sewers

6. At the point of tangency of each reverse curve. (No reverse curves will be allowed between manholes, except where the Utilities Department determines that the nature of the reverse curve is not significant or detrimental to the system.)

Manholes shall generally be located no less than 15 feet (4.6m) from the curb line when within a cul-de-sac. Also manholes shall not be located within the street such that rainfall runoff is directed to the manhole.

Manholes (and cleanouts) shall generally be located at least 10 feet (3.0m) past the downstream property line of the last property served. Where future

extensions of the wastewater line will be required, then the manhole shall be located parallel with the upstream property line, if required (i.e. within the street along the property's entire frontage).

B. Slope of Manhole Channels: When sewers of uniform size and slope pass through a manhole, the slope shall be maintained and the invert at the center of the manhole shall be given. In sewers that change slope but are uniform in size, the slope of the incoming sewer(s) shall be carried through to the outlet and the invert elevations at the inlet(s) and the outlet shall be given. Where diameters of sewer pipes change, and in junctions involving major direction or slope changes, the various elevations shall be selected to match water surfaces under average (not maximum) flow conditions at ultimate tributary area development.

The slopes in manhole channels indicated below are minimum values and must be increased where required by hydraulic consideration within the manhole.

Table of Added Drop Through Manholes (In Feet)

Diameter of Inlet Pipe	Diameter of Outlet Pipe				
	8"	10"	12"	15"	18"
8"	--	.08	.33	.50	.67
10"	--	--	.25	.42	.58
12"	--	--	--	.17	.33
15"	--	--	--	--	.17

When the incoming sewer makes an agle of 45° to 90° with the outlet sewer, add 0.10' to the above values with the exception that the minimum drop shall be 0.20'. When the angle is 15° to 45°, add 0.05 to the tabulated value with a minumum drop of 0.10'.

C. Drop Manholes: While not encouraged, drop manholes may be required because of some physical constraint; they should not be used to merely avoid extra depth in trench unless unusual circumstances exist. Where approved, the drop shall not exceed 10 feet (3.0m) and shall be constructed in accordance with Plate No. 18.

D. Undeveloped Areas: Manholes in undeveloped areas require special protection as discussed in section 3.9 Materials.

E. Rim Elevations of Manholes: Top elevations for all manholes shall be shown on the profile. In paved areas, the manhole rim elevation shall match the finished grade. In other than paved areas or travelled way, the height of

the manhole rim will normally be 18 inches (450mm) above the finished grade, highwater mark, or above the top of future fill areas. The elevations shown for the tops of manholes on the design plans shall not relieve the contractor from making final adjustments to match street surfaces.

F. Design (Size): Standard manholes shall be in accordance with Plate No. 17 (4' diameter) and Plate No. 20 (5' diameter). Shallow manholes shall be in accordance with Plate No. 19. Normally, manholes will be 4' diameter (1.2m); 5' diameter (1.52m) manholes are required for lines 18" (450mm) and larger or where the depth to pipe invert exceeds 18 feet. Where the depth exceeds 18 feet, the cover (lid) shall be 30" (750mm) for safety reasons.

G. Protection: Where new sewers are to be connected to a manhole which is in active use, the designer shall require such protection as is necessary to prevent construction debris from being washed into the active sewer. Plugged inlets or other suitable protection shall be required for the active manhole before beginning manhole modification or cleaning of new sewers. Bypass methods shall be to the satisfaction of the Utilities Department.

H. Safety: Refer to Section 7.15 Construction for discussion of manhole safety.

2.9. CLEANOUTS

Dead end lines under 200 feet (60.1m) long may terminate in a cleanout unless a manhole is required by section 2.8. If a future extension of said dead end line will include a manhole within 400 feet (122m) of the uppermost manhole, a temporary cleanout is permitted.

A. Location: Refer to applicable portion of Section 2.8.

B. Design: Cleanouts shall be constructed in accordance with Plate No. 26.

2.10 SERVICE LATERALS

The Utilities Department will inspect the construction of service laterals from the main sewer line to the property line. The Building and Safety Department inspects the lateral from the property line to the building or house.

Wherever it is known or can be reasonably assumed that a building sewer connection is required, a service lateral shall be shown on the plans and installed to the property line as a part of the street sewer construction prior to paving. An independent service lateral shall be provided for each owner. Service laterals shall be installed in general conformity with Plate No. 23.

A. Size: Service laterals for single family dwellings shall normally be 4 inch (100mm) minimum diameter unless otherwise required by the Uniform Plumbing Code. Condominiums or townhouses shall normally be required to have separate 4 inch minimum diameter laterals, rather than one 6 inch minimum diameter lateral per building. All other laterlas for commercial or industrial uses shall be no less than 6 inches minimum diameter.

Pipe lengths for laterals shall not exceed manufacturer's recommendations. The maximum size lateral connection by wye or tee fitting to a larger diameter sewer shall be six (6) inches (150mm). A manhole shall be installed when an eight (8) inch or larger sewer is connected to an equal or larger diameter sewer.

B. Depth: Service laterals from the main sewer to the property line shall be constructed at a 2.0 percent grade unless otherwise approved. In addition, the depth at the curb or property line shall normally be six (6) feet (1.8m) minimum from top of pipe to ground surface.

The grade and location of laterals within the property are under the jurisdiction of the Building and Safety Department. As a guide, the laterals should be at a minimum 2.0 percent grade from the property line to the point of connection at the house.

C. Future Connection: Unused openings shall be tightly sealed and supported in a manner to facilitate their future location and use. Developer's engineer shall select appropriate service lateral locations and shall instruct contractor to locate lateral according to the design elevations and locations. Likewise, the adequacy of such in-place laterals shall be verified by the owner/developer prior to the future connection.

D. Laterals in Cul-de-sac Streets: Where numerous laterals connect to the end of a sewer, they shall be brought into a standard manhole. Two such laterals may enter each of three inlet channels in preference to installing numerous wye branches in series downstream from the terminal manhole.

E. Backflow Prevention: It is the designer's responsibility to recognize the possibility of reverse flow in service laterals serving lots or buildings with plumbing fixtures below the nearest upstream sewer manhole rim (device required where pad elevation is below upstream manhole rim). In such instances, a suitable backflow or overflow device shall be provided. The lots where prevention is required shall be indicated on the plans; the device or valve used shall be approved and inspected by the Building and Safety Department. See Plate No. 28 for details regarding installation.

2.11 STRUCTURAL REQUIREMENTS

A. Under Roads: All structures and pipe placed under public roads shall be of sufficient strength to support, with an adequate factor of safety, the backfill, road surfacing and H-20 per AASHTO Standard Specifications, truck loading with impact. Higher loading may be as specified by the Public Works Department or as required by good design.

B. Other Pipes and Structures: Sewers designed to cross under or over other pipes or structures shall be protected from damage and shall be constructed to prevent endangering the other pipe or structure. In this regard, particular attention should be given to the possibility and prevention of settlement-caused damage. Also where future replacement of any line may be extremely difficult due to the pipe or structure, special design consideration may be required. Any of the plates which detail various encasements or other protection may be required in such instances.

C. Flexible Joints: Flexible joints which will allow for differential settlements or other movement of sewer pipe, sewer structures, adjacent pipe and adjacent structures shall be provided where sewer lines enter encasements, manholes or other structures. Flexible joints shall be within a minimum of 24 inches (600mm) of such structure, except for ABS Composite pipe for which this requirement does not pertain.

D. Steep Grades: Sewers laid on grades steeper than 10 percent which are not under nor intended to be under pavement should be examined for possible erosion protection. Where the slope exceeds 30 percent (3.33 horizontal to vertical) a redwood check dam (Plate No. 15) shall be installed across the trench line at 20 feet intervals to reduce erosion.

Slopes above 35 percent (2.86 horizontal to 1 vertical) shall require sand/cement bags be placed along the trench line at the intervals specified in Plate No. 16 to reduce the flow of water within the pipe trench.

Concrete anchors in accordance with Plate No. 14 will only be required in special instances, where such anchorage is deemed necessary to prevent pipe movement.

2.12 PRIVATE (RESIDENTIAL) PUMPING SYSTEMS

General City policy is to avoid private residential pumping systems except in those cases where such a system is either: (1) in the City's best interest or (2) the only method for sewering a lot which cannot be adapted to a gravity sytem or eliminated. In any case, the use of a private pumping system requires special Utilities Department approval.

Where such a system is employed, the City will not accept responsibility for the satisfactory operation and maintenance of the private system; a document recorded against the property shall confirm this. However, while the design responsibility rests with the developer/owner, the following are considered to be minimum standards, along with those on Plate No. 32.

A. All equipment and accessories shall be standard manufactured items with those in contact with sewage being specifically manufactured for sewage use.

B. The engineer shall submit, if required, a listing of satisfactory installations using the same products.

C. Individual systems shall meet the requirements shown on Plate 32. Of particular importance are the following:

1. The sump shall have a minimum 400 gallon (1,515 liters) capacity.

2. The system shall be of the duplex type (2 pumps) and have duplex controls which will automatically alternate the pumps and energize both pumps and an alarm during high liquid level.

3. Pumps shall be heavy duty centrifugal non-clog type with mechanical seals and cast iron construction. Each pump shall have a minimum 60 gpm capacity when pumping against a total dynamic head of 20 feet. The impeller shall have a 2-inch solids handling capacity. The motors shall be completely oil filled and fully submersible.

4. Discharge line shall be 3-inches in diameter with a working pressure of not less than 150 psi. All underground discharge piping shall be PVC schedule 40 and above ground piping shall be PVC schedule 80.

5. The shutoff valve shall be either the ballcentric or eccentric type with a working pressure of not less than 150 psi and suitable for wastewater use. The check valve shall be a rubber flapper swing non-slamming type with a working pressure of not less than 150 psi and suitable for wastewater use.

D. The discharge lines shall be arranged such that there is gravity flow into the main sewer from the property line.

E. Where a unit serves a number of homes, it shall be sized to handle daily flows of at least 500 gallons per day (1,900 liters per day) and a peak discharge into the unit to reflect the number of residences.

F. All controls shall be non-fouling type and all mechanical and electrical equipment shall equal or exceed City or other pertinent codes.

G. Backflow prevention devices as required to prevent water system contamination shall be installed.

H. Where a pumping unit is proposed, it shall be requested prior to tentative tract map approval, except for those cases where the City may decide to approve the unit at a later date.

2.13 FORCE MAINS AND LIFT STATIONS

All sewage shall reach the system by gravity flow, in a fresh (non-septic) condition susceptible to conventional sewage treatment processes. Where extreme hardship conditions prevail and a substantial area cannot be sewered by gravity sewers, in accordance with these requirements, a sewage pumping station may be considered. No pumping facilities shall be designed or incorporated in sewer plans without prior approval.

A. Lift Stations Design: Lift stations, where permitted, shall be of the dry-pit type incorporating the following features:

1. Pumps or other devices shall be provided in duplicate, arranged for positive priming.

2. Capacity shall be provided to handle ultimate peak flow from the tributary area with the largest pump out of service. Stage installation of pumps will be permitted if space is provided for future pump units.

3. Access shall be provided to site for removal and repair of equipment.

4. A means for dewatering force mains shall be provided.

5. Holding capacity in the wet well equivalent to a 24 hour accumulation of sewage from the fully developed area tributary to the pump station.

6. Bottom of wet well shall slope to suction lines at least 1.75 vertical to 1.0 horizontal. It is recommended that the width of the flat bottom in the wet well not exceed twice the diameter of the suction pipes.

7. Pump stations for newly developed areas shall not be located in road right of way, but shall be located on a separate parcel of land and shall include fence, gates, landscaping, etc. Pump stations located in road right of way will only be considered when it can be demonstrated to the governing body of the road right of way and the Director of Utilities that no other site out of the road right of way is possible and such facility is not temporary.

8. A pump station shall have suitable adjustable level control, sump pump, dehumidifier, ventilation, lights, locking entrance door, running time meters, and cathodic corrosion control.

9. Pump and fittings shall be designed to permit the passage of a three (3) inch (75mm) diameter sphere through the pump.

10. Standby power with automatic pump drive transfer shall be provided except when waived by the Director of Utilities. Consideration should be given to using natural gas engines.

11. Compressor to inject air into the force main at a point outside of pump station so that air will not collect back of check valve with possibility of air locking pump.

B. Force Mains: Force mains shall be laid on a continuous positive grade and to grades designed to eliminate air pockets in the line.

C. Construction of Special Structures: Design criteria for special facilities (i.e. junction boxes, etc.) that are not covered in previous sections are to be prepared individually for each specific job, and shall be as approved.

2.14 INDUSTRIAL WASTE DISCHARGE

The developer/engineer should be aware that the City regulates the physical and chemical content of wastewaters discharged to the sewerage system. These regulations are contained in an industrial waste ordinance.

Typically, this ordinance only applies to those developments without a discharge of other than domestic wastewater. However, the ordinance should be reviewed if wastewater will contain any hazardous toxic materials, heavy metals, or any other substances which may be harmful to the operation and maintenance of the sewerage system. The ordinance then requires either the substance be prohibited from discharge or pretreated prior to its discharge to the sewer. Questions and further details concerning these regulations should be directed to the City Industrial Waste Inspector, Utilities Department.

Also, Plate No. 29 details a sampling well which may be required of any industrial discharges.

2.15 ABANDONMENT OF WASTEWATER LINES

Refer to Section 8.0.

◆ 3 – Materials

SECTION 3.0

MATERIALS

3.1 GENERAL REQUIREMENTS

Materials shall be chosen for their strength, durability and ease of maintenance, with due consideration for dead and live loads, beam strength and resistance to corrosion. Pipe joints shall be selected to provide positive protection against entrance of roots and ground water, with sufficient flexibility to adjust to the trench bedding. All materials, unless specifically approved otherwise, shall be new and unused.

This section establishes the material requirements for pipe products, backfill materials, and manholes. Approval to use any of these materials on a specific project is subject to the constraints imposed by other pertinent sections of these standards or as required by the Utilities Department.

In general, pipe installations for most projects will use either VC, PVC or ABS products. Unless the Utilities Department takes exception during the plan checking process, it can be assumed that either of the three products is acceptable. However, if exception is made, such shall be reflected in the next plan check. Where alternate materials are shown, the various load factors for each reach must be indicated by the corresponding pipe material.

3.2 TESTING AND FINAL ACCEPTABILITY OF MATERIAL

The Utilities Department shall require such tests and certifications as deemed necessary to show that the specified materials have been employed. Notwithstanding prior factory or yard inspections, the Director shall have the right to reject any damaged or defective materials found on the job which will affect the durability of the installation and order its removal from the site.

3.3 RIGID PIPES

Rigid pipe, fittings and joint materials specified consist of Vitrified Clay (VC), Reinforced Concrete (RC), and Ductile Iron (DI).

A. VC Pipe and Fittings: All VC pipe and fittings shall conform to the quality and strength requirements of ASTM designation C700 and C301 as it pertains to extra strength, unglazed vitrified clay pipe. Each section of

pipe shall be stamped with either "ES" or "EXTRA STRENGTH" designating the strength class. VC pipe joints shall be either plain end or bell and spigot, with joints conforming to ASTM C425.

"Bandseal" joint is acceptable provided:

1. A heavy duty, corrosion resistant shear ring is used.
2. Clamps and bolts are supplied by manufacturer (type 316 stainless steel).
3. Collar is Butadiene Styrene synthetic rubber as supplied by manufacturer.
4. Bolts should be tightened with a special torque wrench as recommended by the pipe and manufacturer.

B. Reinforced Concrete Pipe and Fittings: Reinforced concrete pipe and fittings shall conform to the quality and strength requirements of ATSM C76, designed for a minimum head of twenty-five (25) feet (7.6m). The minimum class shall be class III. Cement used in the manufacture of the pipe shall conform to ASTM C150 as it applies to type II cement. Special D-loadings for all pipelines shall be noted on the construction drawings. Joint design shall conform to ASTM C443 and as modified herein:

1. The joint shall be all concrete bell and spigot or flush bell type. Other type of joints may be used if prior written approval is obtained.

2. The gasket, either rubber or neoprene, shall be confined in a groove formed in the outside surface of the spigot end of the pipe.

C. DI Pipe and Fittings: Ductile iron pipe and fittings shall conform to ASTM A746. The tensile or ultimate strength shall be 60,000 psi (414 MPa) minimum with a yield strength of 42,000 psi (290 MPa) minimum. All pipes and fittings shall be of sufficient thickness to withstand the designed working pressure and depth of cover. Each pipe length shall be marked with either "DI" or "Ductile Iron" and either a strength class or thickness.

If required, the pipe shall have a polyethylene liner complying with the requirements of ASTM D1248 and having a thickness of approximately 20 mils (51mm). Such a liner shall be similar to that manufactured under the trade name "polybond."

All ductile iron pipe and fittings together with connecting ferrous bodied fittings, which are to be buried shall be encased in polyethylene film prior to backfilling the fitting or pipe. Polyethylene encasement (baggy) shall conform to AWWA C105(ANSI A21.5).

3.4 PLASTIC PIPES

Plastic pipe, fittings and joint materials specified herein consist of Poly-Vinyl Chloride (PVC), Acrylonitrile Butadiene Styrene (ABS), and

Polyethylene (PE). All materials incidental to plastic pipe installations such as gaskets, joint lubricants, cements, etc. shall be supplied by the pipe manufacturer. All plastic pipe shall be bedded and backfilled as specified in plates 6 and 7.

All plastic pipe entering or leaving a manhole shall have a standard gasket as supplied by the pipe manufacturer firmly clamped around the pipe exterior and cast into the concrete structure base or near the structure wall center as a water stop.

A. PVC Pipe and Fittings: Pipe and fittings shall conform to the quality requirements and strength characteristics of ASTM D3034 "Type PSM Poly Vinyl Chloride (PVC) Sewer Pipe and Fittings." The standard dimension ratio (SDR) shall be 35 minimum where the SDR is the ratio of pipe diameter to wall thickness. Minimum pipe stiffness shall be 46 psi (.317 MPa). Pipe straightness shall be a maximum of 1/16th inch per foot unless otherwise approved. Pipe shall have an Integrated Bell Gasketed Joint. Rubber sealing gaskets shall meet the requirements of ASTM D3212. Pipe bells shall have the rubber ring present in the bell groove at the factory. No solvent cement joints will be allowed.

Pipe shall be clearly marked as follows at intervals of five feet (1.5m) or less:

- o Manufacturer's name or trademark
- o Nominal pipe size
- o PVC cell classification (12454-B or 12454-C or 13364-B)
- o Legend "Type PSM SDR-35 PVC Sewer Pipe"
- o ASTM D3034

Fittings shall be clearly marked as follows:

- o Manufacturer's name or trademark
- o Nominal size
- o Material Designation "PVC"
- o "PSM"
- o "ASTM D3034"

PVC solid wall laterals shall conform to ASTM D3034, Type PSM, as well as the following:

I.D.	SDR	Min. Wall Thickness
4"	35	0.125"
6"	33.5	0.180"

B. ABS Pipe and Fittings: ABS pipe, fittings and cement specified herein shall conform to quality requirements and strength characteristics of ASTM D2680 as it pertains to composite pipe.

Jointing of pipe shall be in strict accordance with the manufacturers' recommendations. (See Section 7.6). Pipe straightness shall be a maximum of 1/16th inch per foot unless otherwise approved.

Joint solvent cement shall conform to ASTM D2235 and pipe shall have a home mark to indicate full penetration of the spigot when a joint is made.

Pipe shall be clarly marked as follows at intervals of five (5) feet (1.5m) or less:

- o Manufacturer or principal supplier's name
- o Nominal pipe diameter
- o Material designation "ABS"
- o "ASTM D2680"

Fittings shall be marked as follows:

- o Manufacturer or principal supplier's name
- o Nominal pipe diameter
- o "ASTM D2680"

ABS laterals shall be solid wall type conforming to ASTM D2751 with the minimum wall thickness being 0.125" (at SDR 33.5) for 4" and 0.180" (at SDR 35) for 6", or as recommended by manufacturer.

Lettering on fittings as well as pipes shall be legible and permanent under normal conditions of handling and storage.

C. PE Pipe and Fittings Unless otherwise approved, all polyethylene pipe and fittings shall conform to the quality and strength requirements of ASTM D1248 Type III with PPI recommended designation of PE3406. The pipe material shall contain ingredients to provide protection against ultraviolet degradation during processing and subsequent weather exposure. Approved method of joining pipe and fittings to one another shall be by the thermal butt fusion system. All fusion must be done by personnel trained by the pipe supplier, or other qualified person, using approved tools. In addition, pipe lengths, fittings and flanged connections to be used shall be of the same type, grade, and class of polyethylene compound and supplied by the same raw material supplier. Pipe class or thickness shall be the higher of the manufacturers' recommendations or as required by the Utilities Department.

Marking on the pipe shall include the following at intervals of five (5) feet (1.5m) or less:

- o Manufacturer's name or trademark code
- o Nominal pipe size
- o Type of plastic material "PE3406"

Polyethylene pipe usage is reserved for special conditions; therefore, no installation specifications need be included here.

3.5 OTHER PIPE MATERIALS

Other pipe materials may be approved by the Utilities Department for a specific project.

3.6 PIPE TRENCH MATERIALS

Refer to Plate No. 3 for trench cross section terminology.

The materials listed below should be considered as standards unless specific approval is received to deviate from the values shown. In such instances, the request should be made prior to any installation. All sand/gravel mixtures shall be free of vegetable matter or other deleterious substances.

A. Type A Material: shall be well graded imported sand with varying sizes within the following range:

Sieve Size	Percent Passing
No. 4	100
No. 8	80-95
No. 200	0-10

B. Type B Material: shall be an imported sand/gravel mixture as follows:

Sieve Size	Percent Passing
3/4" (20mm)	100
No. 4	35-65
No. 200	0-10

and have a sand equivalent value of not less than 30.

C. Type C Material: shall be an imported sand/gravel mixture which may be approved as an alternate to type B material as follows:

Sieve Size	Percent Passing
3/4" (20mm)	100
1/2" (13mm)	90-100
3/8" (9.5mm)	40-100
No. 4	30-80
No. 8	0-45
No. 200	0-5

D. Type D Material: shall be an imported gravel/rock mixture as follows:

Sieve Size	Percent Passing
3/4" (20mm)	100
1/2" (13mm)	90-100
No. 4	10-30
No. 8	0-15

E. Type E Material: shall be an imported gravel/rock mixture as follows:

Sieve Size	Percent Passing
1" (25mm)	100
3/4" (19mm)	90-100
3/8" (9.5mm)	20-55
No. 4	0-10
No. 8	0-5

The above material corresponds to ASTM D448, Size #67 and AASHTO M-43 Size #67.

F. Type F Material: shall be native material removed from the trench excavation or nearby surroundings which is free from vegetable matter, trash or other rubbish, and other deleterious matter. The material shall meet the following:

- Within pipe zone to 6" (150mm) (Where approved) - 1" max. size
- Within pipe zone to 12" (300mm) above pipe - $1\frac{1}{2}$" max. size
- Above pipe zone - 6" max. size or as required by the Public Works Department, whichever is more stringent.

G. Type G Material: shall be rock as follows:

Sieve Size	Percent Passing
$2\frac{1}{2}$"	100
3/4"	0-20

This material is primarily intended where the trench has been over-excavated so that a firm foundation can be made in areas of excessive groundwater flow. In such cases, a transition material must be used to separate the pipe from the coarser type G material. Such transition material must be well chocked into the voids of the coarser material.

3.7 SPECIFIC USES OF PIPE TRENCH MATERIALS

The following can be used as a guide for the selection of proper trench materials, along with the information contained on the plates. However, if the designer feels that more stringent backfill materials should be specified, then this should be done.

MATERIAL TYPES

	VCP		PVC			ABS COMPOSITE		
Zone	LF= 1.5	LF= 1.9	LF= 1.5	LF= 1.7	LF= 1.9	LF= 1.5	LF= 1.7	LF= 1.9
Foundation			G or Same as Bedding					
Bedding	A	E	A	B	Conc.	A	D,E	Conc.
Haunching	A	E	A	B	Conc.	A	D,E	Conc.
Initial Backfill	A	A,E	A	B	B	A	A,D,E,	A,D,E
Final Backfill	F	F	F	F	F	F	F	F

Refer to the plates for additional details. Also the selection of any pipe trench material should consider a well graded product within the limits specified above. This will lessen the incompatibility of adjacent materials and subsequent trench settlement.

3.8 ROADWAY MATERIALS

Pavement materials for resurfacing of trenches cut into existing pavement shall comply with the requirements of the City of Thousand Oaks, Department of Public Works Road Standards adopted by the City Council on December 21, 1976 and all subsequent amendments thereto (for information, Plate No. 33 contains

portions of those requirements). Asphalt, aggregate base and aggregate sub-base specifications are those set at by the latest published edition of State of California, Department of Transportation Standard Specifications.

3.9 MANHOLES

Manhole materials shall conform to those listed in Plates 17, 19, and 20, in addition to the following:

A. The design and pre-cast construction of manhole sections shall conform to ASTM C478 which include the following (for information):

- o Concrete shall be a minimum 4000 psi (27.6 MPa) compressive strength.
- o Access opening shall be a minimum 24 inches (600mm) in diameter.
- o Steps shall be a maximum 16" (400mm) apart and shall be a minimum of 10 inches (250mm) wide.
- o Rejection of the manhole section may be made if: (1) there are damaged or cracked ends, where such damage would prevent making a satisfactory joint, (2) any continuous crack having a surface width of 0.01 inches (0.3mm) or more and extending for a length of 12 inches (300mm) or more, regardless of position in the wall, (3) fractures or cracks passing through the wall except for a single end joint that does not exceed the joint depth, or (4) surface defects indicating honeycombed or open texture.

B. Steps are to be 3/4" (20mm) minimum and shall be galvanized after fabrication.

C. Joints between riser sections shall be cleaned and a preformed plastic or "mastic" sealing gasket or joint filler shall be installed prior to setting the next barrel or cone section. Cement grouting will only be allowed for the joint between the bottom ring and the base.

D. Undeveloped Areas: When manholes are constructed in natural or man-made drainage courses or flood channels, the manhole covers shall be watertight and shall be fitted with a composition gasket and bolted down with eight (8) stainless steel cap screws. To further alleviate infiltration, all interior concrete surfaces including the manhole shafts shall have at least one coat of primer and two coats of protective coating (Amercoat 64 primer, and Amercoat 320 protective coating, or approved equal). In other undeveloped areas above the high-water level, bolt-down vandal-proof manhole covers shall be used as specified on Plate No. 21.

Where required to prevent an extremely visible manhole in an area which is otherwise improved, additional camouflaging may be required.

3.10 MANHOLE/CLEANOUT LIDS

All public manhole covers shall have "City of Thousand Oaks" cast around the perimeter of the top with minimum 1½ inch (40mm) letters followed by the word "sewer" indicating the use of the manhole. Two inch letters are preferable but not required. For private sewers omit "City of Thousand Oaks" on the lid and substitute "Private." Cleanout lids shall include the word "Sewer."

3.11 CONCRETE MATERIAL

Approved concrete material shall be based on the 28 day compressive design strength and shall be chosen according to the following chart showing its intended use:

Class	Application	28 Day Compressive Strength, psi, min.	Maximum Aggregate Size, Inches	Slump Inches Min	Max
A	Walls, drip structures and reinforced structural encasement	3,500	1½"	3	6
B	Manhole bottoms, drop pipe encasement, pipe bedding, non-structural use	3,000	1½"	2	6
C	Pump mix for abandoning lines	2,000	3/8"	----	

3.12 REINFORCING STEEL

A. Bar Reinforcement: Shall be grade 40 minimum deformed bars conforming to ASTM A615, accurately placed and secured in position to accomplish the intent of the design plans. Where bars are spliced they shall be lapped at least twenty (20) diameters or butt welded, except where otherwise shown on the plans.

B. Mesh Reinforcement: Mesh reinforcement shall conform to the requirements of ASTM A185; wire gauge and mesh dimensions will be as shown on the plans.

◆ 4 – Plan Preparation

SECTION 4.0

PLAN PREPARATION

4.1 SHEET SIZE

Overall dimensions 24" x 36"; minimum thickness of Mylar film to be 4 mils.

4.2 MARGINS

Two inches on left, all others 1/2 inch

4.3 SIGNATURE BLOCK

All sheets of the plans shall have an approved signature block, see plate 1. The approval blocks shall be signed before any construction occurs. Any changes to the plans after initial approval shall be shown as revisions and shall be approved by the Utilities Department.

4.4 COVER SHEET

This shall be the first sheet in the set and shall contain:

A. An index map with an overall plan at a scale of 1" = 300 ft. showing general layout of sewer lines, sizes, manhole locations and numbers, flow direction arrows, named streets, tract boundaries, lot boundaries and numbers, a sheet index, and other pertinent information. Care must be exercised to make sure scale and orientation is correct since these index maps are used to produce a wastewater atlas and incorrectly drawn maps will have to be redrawn.

B. A vicinity map with a scale of 1" = 1,000 ft. showing tract boundary, streets, adjacent tracts, major streets outside of tract boundaries and the location of the bench mark.

C. All bench marks used in the project shall be graphically shown on this sheet and the elevations, descriptions, locations, etc., spelled out as illustrated below:

B.M. No._____Elev._____F.B._____Page_____

Type of Marker_____

Location_____

_____

All elevations used in preparation of standard plans shall be based on United States Coast and Geodetic Survey (U.S.C. & G.S.) mean sea level datum adjusted to 1961.

D. The general notes shall be shown on the key map sheet and need not be shown on the other sheets. The general notes shall include a note requiring compliance with these standards and five day notice prior to beginning construction.

E. Wastewater service certification is required and shall be worded as follows:

CERTIFICATION

I hereby certify that the wastewater system as shown on drawing number _____sheets_____through_____ has been designed to adequately service each and every lot or facilities shown on said plans.

_____ _____ _____
Registered Civil Engineer RCE No. Date

If the project does not involve specific lots, then substitute the words "... designed to adequately provide for the development, said system is intented to serve."

F. "As built" certification is also required. The wording shall be as follows:

"AS BUILT" CERTIFICATE

I hereby certify that the work shown on drawing number_____ sheet_____through_____ inclusive, marked "as built" has been constructed in conformance with lines and grades as shown on said plans and referred specifications.

_____ _____ _____
Registered Civil Engineer RCE No. Date

G. Appropriate designation for Council approval to construct, located above title block (number and date to be completed by Utilities Department).

"Construction Resolution No._____ Date_____"

4.5 PLAN OF WASTEWATER SYSTEM

Plan drawings shall show location of wastewater mains, laterals and other structures in relation to survey lines and stations. Provide all data for horizontal deflections or curves and indicate limits of any easements. Any known pad locations which are adjacent to an easement should be shown as well as fences, walls, trees, etc. which are within the easement. Show and label, on the plans, the size and ownership of all existing and/or proposed underground utilities that cross or parallel the sewer.

4.6 PROFILE OF WASTEWATER SYSTEM

Profiles shall show the grade, including any vertical curve data, size and type of pipe and the distances between manholes and other structures. Also show depth and elevation of laterals at main and at property line or at edge of easement. The type of bedding or encasement required to carry loads on the pipe shall also be shown. For each section of sewer, the profile shall show alternate acceptable pipe materials that are permissible or whether only one material is acceptable. Show elevations to 0.01 foot of sewer invert. Manhole rim elevations are also required. Any pipe line two inches (2") (50mm) or more in diameter which crosses the sewer and especially water, gas, telephone, power, storm drains, television and oil lines, shall be shown and labeled on the profile. The grade of major parallelling lines within 5 feet (1.5m) of the sewer shall be shown as dashed.

The City is not responsible for the accuracy of the location of these underground lines, and approval of sewer plans by the City does not constitute a representation as to the accuracy of the location of, or the existence or nonexistence of any underground utility, pipe, or structure within the limits of the project.

4.7 GRAPHIC SCALE AND NORTH ARROW

All plan and profile sheets shall contain:

A. A graphic scale, horizontal as well as vertical, illustrated such that a true representation is produced when the plans are reduced in size, and they shall be as follows:

horizontal 1" = 40 feet (25mm = 7.6m)
vertical 1" = 4 feet (25mm = 1.2m)

Vertical scales of 1" = 8 feet will only be accepted for lines in steep areas where the 1" = 4 feet scale can not properly be used.

B. A north arrow oriented toward the top or to the right only, or as approved.

4.8 PROCEDURE FOR APPROVAL

Approval for improvement plans consists of two phases. Each phase consists of a series of requirements which must be met before final acceptance.

A. Requirements for authorization of construction (See Section 5.0)

B. Requirements for final acceptance (See Section 11.0)

4.9 PLAN CHECKING LIST

The following list is intended as a guideline to assist the preparer; it is not represented to be a complete list of requirements.

Check List
Plan Checking and Project Requirements
Wastewater

Title block
Bench mark
Key map (1" = 300') (25mm = 91m)
Vicinity map (1" = 1,000') (25mm = 305m)
North arrows (to right or up)
Size of sheets (20" x 30") (500mm x 750mm)
Margins around drawing
General notes and others
Design certificate (sign)
As-built certificate
Graphic scales (plan and profile)
Location of lines referring to center of streets
No wastewater main under sidewalk
Crossing of other lines, i.e. storm drain
Pad elevations
Backwater valves
Manhole spacing (no manhole on private property if possible)
Existing drawing numbers
Existing and proposed surfaces
Easements and assessor parcel numbers
Deep lines, load factors
Maximum and minimum pipe lengths

Change order fee
Existing laterals installed by other tracts or previous construction
Condominium, individual laterals
Laterals for recreation buildings, etc.
Insurance certificate
Check master plan
Obtain CFS calculations
Will serve letter
Brokers name and bond
End of curve (E.C.), Begin of curve (B.C.), Point of Compound Curve (P.C.C.), Point of Reverse Curve (P.R.C.) on plan and profile
Check requirements for vertical curved sewers
House laterals to be long enough to clear other utilities (PUE - public utilities easement)
Submit original insurance certificate to City Clerk after City Attorney approval
Check street names on tract map, plans and street address
Cost estimate
Separate laterals for each ownership
Deep laterals may use chimney
Approval of exceptions documented.

4.10 STANDARD LANGUAGE FOR DEDICATION OF FACILITIES TO CITY

The following language is intended as an example of standard language for the dedication of facilities to the City. It shall be modified if necessary to fit a particular set of circumstances.

A. Grant Deed, Quitclaim Deed, Bill of Sale or Other: All of its rights, title and interests in and to the wastewater system, pipelines, manholes and appurtenances thereto as located in, on, over, under, and across streets, easements and rights of way shown on Tract_____ as per map thereof recorded in Book_____, page _____, and shown on the easement(s) as per Book_____, Page____ of Official Records, in the office of the County Recorder, County of Ventura, State of California.

B. Easement Deed: An easement and right of way to lay, construct, repair, maintain, operate, renew, and replace pipeline and appurtenances incidental thereto for the transportation of wastewater with the rights of ingress and egress to and from same, in, over, under and across the following described real property in the County of Ventura, State of California.

4.11 STANDARD NOTES

The standard notes shown on the following page(s) should be included on the cover sheet as applicable. They are subject to change to suit the needs of the Utilities Department.

General Wastewater Notes

1. Contractor shall notify the City of Thousand Oaks (805) 497-8611 five (5) days prior to commencing construction.

2. All construction shall conform to the City of Thousand Oaks Utilities Department Wastewater Design & Construction Standards adopted May 8, 1979, and as amended.

3. (Note concerning pipe type).

4. Warning: Connection to existing wastewater shall be done only in the presence of the City of Thousand Oaks Utilities Department Inspector.

5. The location of and existence or non-existence of underground utilities has been determined to the best of the Engineer's ability, but it shall be the sole duty of the Contractor to verify the location of the existing utilities and to take all necessary precautions to avoid damage to these utilities. The Contractor shall assume sole responsibility for any damage done to existing utilities during construction.

6. Separation between wastewater and water lines shall be in accordance with Plate #30 of the City of Thousand Oaks Construction Standards.

7. All trench backfill and compaction in public right-of-way above the pipe zone will be under the supervision of the City of Thousand Oaks Department of Public Works.

8. The Contractor shall maintain a record of the locations of all wastewater laterals, tees and stubouts. This record shall be delivered to the Developer's Engineers prior to final payment being authorized.

9. Backwater devices shall be installed where noted or indicated.

10. The Contractor shall mark the location of all wastewater laterals with the letter "S" at least 2" high cast into the curb.

11. All laterals to new pipelines are to be tied into main line through use of fittings. Cut-in saddles are not allowed.

12. The wastewater system shall be completed and accepted by the City Council prior to the issuance of a Certificate of Occupancy.

13. Wastewater lines will be internally inspected by a City television crew at the owner/developer's expense. If ABS pipe is used, joints must be closed and ends of pipe must be well coated with cement (Note 13 only applies if ABS pipe is used).

14. The house laterals shall be extended beyond the street right-of-way to edge of P.S.E. (public service easement).

◆ 5- Fees & Requirements For Authorization of Constr.

SECTION 5.0

FEES AND REQUIREMENTS FOR AUTHORIZATION OF CONSTRUCTION

5.1 PLAN CHECK FEE

When wastewater plans are first submitted, a plan check fee shall be paid to the Utilities Department by the developer. This fee shall be at the current rates using the developer's engineer's estimate of the cost of the improvements. This estimate shall be the larger of: (1) the estimate cost using the engineer's projections or (2) the estimated cost using Plate No. 31 (current to time project goes to City Council for authorization to construct). Such cost shall be approved by the Utilities Department. The minimum plan check fee shall be fifteen dollars ($15), and the minimum change order fee shall be fifteen dollars ($15) per sheet of the improvement plans. Under no circumstances shall refunds of the above fee be made. However, the plan check fee required may be increased if actual or subsequently estimated costs exceed that used for the initial fee calculation.

5.2 SUBMITTAL OF BLUE-LINE PRINTS

Two sets of the blue-line prints of the proposed wastewater improvements, one copy of the final tract map, one complete set of other than wastewater improvement plans, and one copy of the developer's engineer's estimate shall be submitted, together with the plan check fee for the first plan check. Plans illustrating an incomplete design and drafting detail may not meet minimum standards and may be just cause for a rejection of the first plan check. The developer or developer's engineer shall submit preliminary plans completed in accordance with these standards. Required will be a study of the tributary drainage area above the subject property and the criteria and calculations used in determining the size of the lines.

5.3 SPECIAL PROVISIONS

If there are unusual conditions which would require substantial deviation from the City Wastewater Standards, particularly with respect to slopes, pipeline cover, or crossings, such deviations should be submitted, in writing, prior to tentative map and/or development project approval, or in any case prior to submittal of the first plan check.

5.4 INSPECTION FEE

Staff shall analyze the plans and materials as submitted and prepare and send comments to the developer's engineer. Upon receipt of revised plans, the developer will prepare a final cost estimate for the proposed improvements, using the most current rates (percentage figures) and unit prices applicable at the time the project goes to City Council for authorization to construct. Also the following is applicable:

A. A minimum inspection fee shall be twenty-five dollars ($25)

B. Construction inspection fees for special situations, as determined by the Utilities Department, such as inspections on Saturdays, Sundays, or City holidays or beyond normal working hours shall be charged as follows:

1. For inspections of special situations during normal working hours, the current inspector rate per hour worked, plus an allowance for fringe benefits, plus 30 percent for overhead.

2. For inspections during overtime periods, the current inspector rate per hour worked multiplied by a factor of 1-1/2, plus fringe benefits, plus 30 percent for overhead.

3. For inspections during Sundays and holidays, the current inspector rate per hour worked, multiplied by a factor of 2, plus fringe benefits, plus 30 percent for overhead.

Closed circuit television inspection of wastewater lines may be employed as discussed in Section 7.1. The initial cost of such inspection is to be included in the inspection fee above,

5.5 EASEMENTS

Any easements necessary must have deeds submitted for checking at this time.

5.6 AGREEMENTS, BONDS, AND INSURANCE CERTIFICATE

Staff will provide the developer with the proper forms and developer shall submit the following:

A. Agreement for construction of wastewater (sewer) facilities (in triplicate with notarization).

B. Insurance certificate with limits as stated in "Agreement"

C. A faithful performance bond (in triplicate and notarized) equivalent to 100 percent of the estimated cost including contingencies of construction.

D. A labor and material bond (in triplicate and notarized) equivalent to 100 percent of the estimated cost.

5.7 APPROVAL FOR CONSTRUCTION

Upon receipt of all documents, bonds, fees, and checking of all documents, bonds, and fees, the staff shall prepare a resolution for City Council action, which is accompanied by the following material:

- Tract original plans
- Agreement for construction of sewer facilities
- Easement deeds
- Faithful performance bond
- Labor and material bond.

The Utilities Department will sign the original plans after approval by City Council, and notify the developer's engineer that the plans are signed and available. The developer's engineer will then provide the Utilities Department with two sets of blue-line prints, and the original drawings will be returned to the developer's engineer until they are "as-built", at which time the originals become the City's property.

No construction should occur before the plans are signed and before the proper five-day Utilities Department notification has been given. This notification will allow time for a pre-construction meeting of all interested parties.

5.8 CONNECTION CHARGE

No parcel of property shall be connected, or building permit issued, to the City's wastewater system until a connection charge has been paid. Refer to Section 10-1 of the Municipal Code for details. The charge is based upon either a single family residence or upon fixture units for commercial and industrial buildings.

5.9 SPECIAL CHARGES

If there are items requiring special approval, the Utilities Department may require deposition of funds or agreements for funds in the future to provide for operation and maintenance of the substandard system.

6 – Construction Staking

SECTION 6.0

CONSTRUCTION STAKING

6.1 GENERAL REQUIREMENTS

Construction staking is the responsibility of the developer, its engineer or contractor. Stakes will be set parallel to the sewer alignment at an offset distance and direction agreed upon with the contractor, but in no case shall construction stakes be offset more than 10 feet (3.0m). Stakes will be set at no greater interval than 50 feet (15.2m) on straight alignments when the sewer slope is 0.6 percent or more. For horizontally curved sewers at less than 0.6 percent slope the stake interval shall be 10 feet (3.0m) and for curved sewers above 0.6 percent slope and for straight sewers below 0.6 percent slope the stake interval shall be 25 feet (7.6m).

6.2 PRESERVATION OF STAKES

Construction stakes shall be carefully preserved by the contractor until after the completed work has been accepted by the City. If two or more consecutive stakes are knocked out during construction, new stakes shall be set at the contractor's expense.

6.3 SERVICE LATERALS

For each lateral, a stake shall be placed near the property line, referenced to show its horizontal and vertical distance from the lateral invert at the property line.

6.4 "AS BUILT"

For all street sewers, regardless of alignment or slope, the developer's engineers shall determine "as built" elevations at the invert centerline of each manhole and shall provide a written record of such elevations to the inspector. Also the stationing for each lateral is required on the "as built" drawings.

◆ 7 – Construction

SECTION 7.0

CONSTRUCTION

7.1 GENERAL REQUIREMENTS

This section describes the use of materials and workmanship to be employed in construction of the wastewater system. The developer/engineer shall prepare such general and special specifications as are necessary to define the nature and location of the work, contractual arrangements, payment for work, and any other matters concerning the owner or his contractor; these items are not discussed within the standards presented here.

A. Quality of Materials: Materials and equipment to be incorporated into the work shall be new and unused unless otherwise approved. In case a reference is not clear as to which of several available grades is desired, the highest quality material shall be used. When construction bids are received directly by the City such bids shall show the proposed pipe material and the manufacturer's name, if more than one type is allowed.

Contractor shall have at the job site or be able to supply upon request, certified copies of factory or laboratory test reports showing the strength characteristics of any materials used in the work. For all reinforced concrete work he shall furnish, in advance of pouring concrete and if requested, the mix design and calculated concrete strength as prepared by the concrete supplier.

B. Substitutions: Where articles or materials are specified by brand or trade name, alternate materials or articles equal to those specified may be approved provided the request for approval is in writing accompanied by supporting data, in ample time to permit investigations without delaying the work. Unless substitutions are approved, no deviation from the standards will be allowed.

C. Quality of Workmanship: All work will be done by persons experienced in the specific work, under competent supervision and in a first class manner to the City's complete satisfaction. When work is being done directly for the City, the contractor in the proposal shall name each subcontractor, and no substitutions will be permitted without prior approval.

D. Defective Work: Any defective materials or workmanship which shall become evident within one year after field acceptance of completed work shall

be replaced or repaired without cost to the City. Refusal of the contractor to correct defective work which is clearly his responsibility will be considered just cause for exclusion from performing future work to be connected to the City's system. Such exclusion does not impair the City's right to bring legal action to correct the deficiencies.

E. City Inspection, Field Acceptance and Guarantee Period: The Utilities Department is responsible for inspection of all excavation, pipe-laying, trench backfill within the pipe zone, and testing. All such work shall be available for inspection at all times. It will be the contractor's responsibility to provide a five (5) day notice to the Utilities Department prior to the start of any work. Such notification will allow for scheduling a pre-construction meeting between interested parties. Failure to provide proper notification may delay the starting date since the Utilities Department may not be able to inspect the work and can not accept any work for which inspection has not been arranged.

Field acceptance is made by the inspector and most often will not coincide with the date of City Council acceptance of the work. However, the one-year guarantee period for all work shall begin as of City Council acceptance. As mentioned in Section 7.1 D, any defective work discovered during this period shall be repaired or replaced and a new one-year period will begin for that corrected work. Minor repairs or replacement, however, will not affect exoneration of the bonds and acceptance by the City as originally scheduled.

All holiday or weekend inspection will be subject to additional charges as discussed in Section 5.4.

F. Public Relations: The contractor shall conduct its affairs in a manner which will lessen the disturbance to residents in the vicinity of the work. In this regard, standard working hours as specified in the Municipal Code (currently 7:00 a.m. to 7:00 p.m.) shall be observed unless prior approval is received. The job site shall be maintained in a condition which shall bring no discredit to the City or its personnel, and all affected private improvements shall be restored to at least their original condition.

G. Television Inspection: In general, unless waived, the City will perform television inspection of the installed wastewater lines to determine acceptability. Such testing will not replace other standard tests such as air testing. The television inspection will be performed initially at no additional cost to the contractor after the line has been air tested and cleaned, but before field acceptance. If defects are noted through this or other testing, then the costs of subsequent television inspection will be charged to the contractor in accordance with the City's currently established rates. Contractor is responsible for cleaning all lines of debris before inspection. If this is not done, then contractor will be charged cost for additional city costs.

7.2 PERMITS

The following may be required of the contractor.

A. Encroachment: Where construction will encroach into the public right-of-way, the contractor shall obtain all necessary encroachment permits. Within City of Thousand Oaks right-of-way, the permit is secured from the Public Works Department.

B. Explosives: Where the contractor anticipates the use of explosives in conjunction with the wastewater construction, a blasting permit shall be first obtained from the Ventura County Sheriff's Department, and all nearby property owners shall be notified.

7.3 CLEARING AND GRUBBING

A. General: Clearing and grubbing which consists of removal of objectionable material from the right-of-way shall be done with caution such that existing wastewater improvements, adjacent property and trees and shrubbery that are not to be removed shall be protected from injury or damage.

Within sewer easements or rights-of-way, trees, shrubs, fences, and all other improvements that have to be removed to permit construction, shall be replaced in kind or size (excluding native trees under 2-inch diameter or native brush) or with approved substitutes unless permission to exclude such replacement is obtained from the owner/agency.

B. Removal and Disposal of Material: The contractor shall be responsible for leaving the site in a neat and finished appearance, free from debris or inflammable material.

C. Oak Tree Ordinance: The developer and contractor should be aware of the City's oak tree ordinance which governs the trimming and removal of oak trees, as well as the limits of construction around the oak trees. If a question exists, the City's Planning Department should be contacted.

7.4 UTILITIES, EXISTING FACILITIES AND CONCRETE REMOVAL

A. Abandonment: Refer to Section 8.0 regarding abandonment of existing wastewater lines and/or structures.

B. Utilities and Existing Facilities: The existing utilities and/or facilities shown on the drawings or the location of which is made known to the contractor prior to excavation shall be protected from damage during the excavation and backfilling of trenches, and if damaged, shall be repaired by

and at the contractor's expense. Any existing utility or facilities not shown on the drawings or the location of which is not shown to the contractor in sufficient time to avoid damage, if inadvertently damaged during excavation, shall be repaired by the contractor; and adjustment in payment, if any, is subject to negotiation between the contractor and the developer, without any City liability.

In case it shall be necessary to remove any such utilities, facilities or any portions thereof, the contractor shall notify the Utilities Department and the owner of the structure. The contractor shall not interfere with said utility and/or facility structures until disposition of the obstruction to the work has been determined and/or notice to relocate or remove has been given by the Utilities Department or authorized agent of the owner of the utility and/or facility so affected.

The fact that any underground utility and/or facility is not shown on plans shall not relieve the contractor's responsibility to comply with these standards. It shall be the contractor's responsibility to ascertain prior to commencing work the existence of any underground utilities or facilities which may be subject to damage by reason of his operations.

C. Concrete, Masonry, or Mortared Construction Removal: At locations shown on plans, portions of existing concrete pavement, curbs, gutters, sidewalks, foundations, and other concrete or mortared structures shall be removed to the lines and elevations specified. Concrete structures or objects not shown or noted on the plans shall be removed where necessary and disposed of by the contractor.

Concrete removal operations in connection with the reconstruction of existing structures, shall be performed without damage to any portion of the structure that is to remain in place. If damage occurs, the contractor shall repair any such damage at his own expense, to the satisfaction of the Utilities Department. Where existing reinforcement is to be incorporated in new work, such reinforcement shall be protected from damage and shall be throughly cleaned of all adhering material before being embedded in new concrete.

7.5 EXCAVATION AND TRENCHING

A. General: Trench excavation shall consist of all excavation involved in the grading and construction of the wastewater line as shown on plans. The contractor shall perform all excavation of every description and of whatever substances encountered, to depths indicated on the drawings or otherwise specified or required. During excavation, material suitable for backfilling shall be piled in an orderly manner a sufficient distance from the banks of the trench to avoid overloading and to prevent slides or cave-ins. All excavated materials not required or unsuitable for backfill shall be removed. Such grading shall be done as may be necessary to prevent surface water from

flowing into trenches or other excavations, and any water from any source accumulating therein shall be removed by pumping or by other approved methods. Such sheeting and shoring shall be done as may be necessary for the protection of the work and for the safety of personnel. Unless otherwise indicated, excavation shall be by open cut except that short sections of a trench may be tunneled if, in the opinion of the Utilities Department, the pipe or duct can be safely and properly installed and backfill can be properly tamped in such tunnel sections.

If blasting is necessary, the contractor shall notify the City of his blasting schedule and procedures and obtain a blasting permit, and shall observe all reasonable precautions in protecting life and property.

B. Excavation: Excavation for sewers shall be made only after pipe and other necessary materials are delivered on the work site. After such delivery, trench excavation shall proceed as rapidly as possible, and the pipe installed and the trench backfilled without undue delay.

Coupling holes and depressions for bells or couplings shall be excavated after the trench bottom has been graded and shall be only of such length, depth, and width as required for properly making the particular type of joint. Where rock excavation is required, the rock shall be excavated to a minimum overdepth of 4 inches (100mm) below the trench depths indicated on the drawings or specified. Overdepths in the rock excavation and unauthorized overdepths shall be backfilled with the same material as the bedding zone. Whenever wet or otherwise unstable soil incapable of properly supporting the pipe, as determined by the Utilities Department, is encountered in the bottom of the trench, such soil shall be removed to the depth required and the trench backfilled to the proper grade with an appropriate material between a coarse sand and a crushed rock to provide a stable foundation.

C. Trench Width and Grade: The width of the trench within the pipe zone shall be such that the clear space between the barrel of the pipe and the trench wall shall not exceed the amount detailed in the standard plates. In general, this will be 8 inches (200mm). The width of the trench above that level may be as wide as necessary for sheeting and bracing and the proper performance of the work. The bottom of the trenches shall be accurately graded to provide uniform bearing and support for each section of the pipe on the proper bedding material as prescribed in the plans or by appropriate details on the plates.

D. Shoring: All shoring for open excavations shall conform to the State of California, Department of Industrial Relations, Division of Industrial Safety "Construction Safety Orders."

The contractor shall be responsible for adequately shored and braced excavations so that the earth will not slide, move, or settle, and so that all existing improvements of any kind will be fully protected from damage.

No shoring once installed, shall be removed until the trench has been approved for backfill operations. Removal of shoring shall only be accomplished during backfill operations and in such a manner as to prevent any movement of the ground or damage to the pipe or other structures.

The contractor shall obtain and pay for all permits for any excavations over five (5) feet (1.52m) in depth into which a person is required to descend or any excavation less than five (5) feet (1.52m) in depth in soils where hazardous ground movement may be expected and into which a person is required to descend.

7.6 PIPE BEDDING AND LAYING

A. General: This portion of the work includes the furnishing of all materials and their proper assembly to result in a first-class wastewater line installation true to line and grade and free from leaks, cracks, and obstructions. Where choices are allowed, the contractor shall select such materials and construction methods as will result in a completed project in full accordance with these Standards. In that regard, refer to Section 3.0 - Materials, and the plates for additional details.

The contractor is warned that the approved wastewater design is based upon a proper combination of pipe strength and pipe support. No acceptance will be given unless the work of trenching, bedding, laying, backfilling and compaction is conscientiously done in accordance with the procedures outlined in these standards.

Except as otherwise approved or included in permits, the maximum length of open trench shall be 600 feet, or the distance necessary to accommodate the amount of pipe installed in a single day, whichever is the greater.

Grades shall be transferred from ground surface to the bottom of the trench by experienced workmen, using not less than three consecutive grade points in common, so that variations from a straight grade may be readily detected. Each length of pipe shall be laid on compacted, approved bedding material as specified and shall have full bearing for its entire length between bell holes excavated in said bedding material to allow for undestructed assembly of all joints. Adjustments of pipe to line and grade shall be made by scraping away or filling in and tamping approved material under the body of the pipe. No wedging or blocking with wood or soil to support the pipe will be permitted. Under no circumstances will a contractor be allowed to dump backfill materials on top of a pipe which is not continuously supported in its final grade position.

Pipe laying will proceed up-grade with the spigot ends of bell-and-spigot pipe pointing in the direction of flow. Each pipe shall be laid true to line and grade and in such manner as to form a close concentric joint with the adjoining pipe,

following manufacturer's instructions for the specific jointing method being used. Pipe shall not be joined, unless specifically approved by "stabbing" "swinging in" or "popping on" spigot ends of pipe into the bell ends. Also where there is a "home" mark on the pipe, the joint shall be fully engaged to that mark. Pipe shall not be laid when the engineer or inspector determines that the condition of the trench or weather is unstable. As the work progresses, the interior of the sewer shall be cleared of all dirt and superfluous materials of every description. If the maximum width of the trench at the top of the pipe is exceeded, the contractor shall install such concrete cradling, pipe encasement, or other bedding as may be required to support the added load of the backfill. Trenches shall be kept free from water until sufficient backfill has been applied to keep the pipe in place. At times when work is not in progress, open ends of pipe and fittings shall be securely closed to the satisfaction of the inspector so that no trench water, earth, or other substance will enter the pipe or fittings. Pipe or fittings damaged during assembly shall be removed and replaced.

Normal bedding shall be excavated at least 3 inches (75mm) below sewer invert, and sufficient bell or coupling holes shall be hand dug to provide 1 inch (25mm) clearance under the bell or coupling. Granular bedding material as specified shall be placed in the trench and carefully shaped to receive the pipe. Pipe shall be set to exact grade on the bedding in firm contact with the pipe for a circumferential distance equal to 1/2 the outside pipe diameter. Each pipe section shall be individually supported.

B. Installation of Flexible (PVC or ABS Solid Wall) Pipes: Unless otherwise modified in these Standards, all flexible pipes shall be installed per ASTM Designation: D 2321 entitled: "Underground Installation of Flexible Thermoplastic Sewer Pipe." Bedding for such pipes is highly critical. Attention is also directed to Plate Nos. 6 and 11 of these standards as well as the information information in A above. Further note the following:

1. Pipe stored outside and exposed to periods of sunlight exceeding 45 days shall be covered with canvas or other opaque material, and provided with air circulation under the protective cover.

2. PVC pipe is a flexible conduit and derives its resistance to vertical loads by pushing against the sides and bottom of the trench. This force can only be resisted by a firm trench wall and bottom and properly placed "bedding" and "haunching" material. Vertical trench walls will be required in the region from the trench bottom to above the pipe. The width of the trench at any point below the top of the pipe should not be greater than necessary for joining the pipe and compacting the bedding and initial backfill.

3. An approved water seal (gasket) shall be placed around the pipe in the manhole concrete base prior to pouring the concrete.

C. Installation of ABS Composite Pipe: The following are in addition to details covered in Section 3 - Materials, and under Section A above.

1. Unless herein modified, all installations shall be in strict accordance with the manufacturer's recommendations, particularly with regard to jointing and safety.

2. It is expected that jointing shall be accomplished by applying a coating of cement to both ends of the pipe to be jointed in sufficient quantity that when the spigot is fully inserted into the socket, a head of excess cement will form around the entire circumference of the outside juncture of spigot and socket. Excess cement shall then be removed. The cement shall be provided by the manufacturer at no cost to the contractor.

3. All ends of the pipe shall be thoroughly coated with solvent cement prior to final installation.

4. Unless specifically otherwise approved, manufactured fittings shall be used for lateral connections instead of cutting-in saddle connections.

5. Items 7.6B(1) Pipe Storage and 7.6B(2) Installation of Flexible Conduits pertain to ABS composite pipe as well, although ABS composite pipe can be considered a semi-flexible pipe. Also item 7.6B(3) should be followed.

6. Minimum radius of curvature below which 3° deflection fittings and shorter pipe lengths may be required and are discussed in Section 2 - Design Criteria.

7. When repairing composite pipe, there shall be no discontinuity of the pipe inner wall. Ruptures in the pipe outer wall may be required if the damage is limited to an area that can be encompassed by a 3-inch (75mm) diameter circle superimposed over the damage. Cell filler repair is unnecessary. A solvent welded ABS repair patch, at least equal to the thickness of the pipe outer wall, shall extend at least 1 inch (25mm) beyond the damage. When damage exceeds these limits, the damaged section shall be cleanly cut off the pipe.

7.7 BACKFILL AND COMPACTION

A. General: Trench backfilling consists of all materials returned to the excavation in the process of wastewater line construction. Backfill and compaction in existing streets shall be in full accordance with the City or County encroachment permit issued for the specific work, and with the City or County land development specifications. In both cases, the filling of trenches shall be subject to approval by the City or County Public Works inspector who shall have full authority to order compaction tests to demonstrate the actual backfill density.

The sequence of backfilling and compaction above the pipe zone (which extends from 6 inches to 12 inches depending upon the case, above the top of the pipe) shall be as directed by the City or County Public Works inspector, but in the absence of such instructions, the following procedure shall govern: Testing for pipe and joint leakage will be done after consolidation of the backfill to the top of the subgrade zone and after laterals have been installed to the property lines.

Backfill, compaction, and resurfacing shall be scheduled so that existing public streets may be opened to normal traffic in accordance with the City or County encroachment permit, and so that the backfill operations closely follow the pipe laying avoiding open trenches overnight.

The trenches or excavations shall not be backfilled without prior inspection by the Utilities Department. Such inspection does not relieve contractor from compliance with the testing of the wastewater line, which should be conducted after final assembly of main sewer, laterals, manholes and consolidation of backfill as described above. Contractor shall assume the cost of removal and replacement of backfill necessary for correction of defective conditions revealed by testing.

B. Backfilling Rigid Pipes: For normal bedding, the space around the pipe, known as the "pipe zone" shall be filled with the appropriate material with the pipe in proper alignment and at the prescribed slope on granular bedding per standard plates. Backfill in the pipe zone may be either compacted by hand tamping methods or flooded into place in a single lift without hand working. In no case, shall sufficient water be applied to float the pipe. Acceptability of compaction in the pipe zone will be determined primarily by visual inspection and probing by the City's inspector to determine that no voids exist in the backfill. The backfill within the pipe zone shall meet the requirements of 90 percent relative compaction.

The backfill zone, between the top of the pipe zone and the bottom of the subgrade zone or ground surface (if no pavement is to be placed), may be filled with approved native material. It shall be placed in lifts not exceeding 3 feet in uncompacted thickness, and compacted by water or mechanical means so as to obtain 85 percent relative density, except for the subgrade zone, consisting of the space under pavement and/or shoulder to at least 2.5 feet below finished road grade which shall be filled and compacted to the prevailing City or County requirements, without flooding or jetting.

C. Backfilling PVC, ABS Solid Wall or Composite Pipes: Compaction of bedding, haunching and initial backfill can be by either mechanical means or flooding. Jetting will not be allowed unless specifically approved by the Utilities Department. Flooding should be attempted only where the trench drains naturally and in fairly rapid manner. If flooding is used, sufficient

time shall be allowed for the puddled or flooded mass in each layer to solidify until it will support the weight of a man before any overburden is placed on the pipe. Apply only enough water to give complete saturation of the haunching and backfill material. Drain off excess water or it will retard the drying and consolidation of the materials. Flooding, if used, shall be applied after haunching is placed. However, to prevent floating of the pipe, some material should be placed adjacent to and over the pipe to add weight.

Final backfill shall be compacted by mechanical means or by jetting. If jetting is used, care must be taken not to disturb the already compacted materials below.

If hydro-hammer is used for compaction of overlying materials, at least 4 feet of backfill must be placed over top of pipe prior to its use. This is required to insure that the pipe is not damaged.

Relative compaction requirements are the same as those for rigid pipes.

D. Final Backfill: If the work is in private property and not subject to public agency requirements, excavations shall be final, backfilled, compacted and finished to match original conditions as interpreted by the Utilities Department as further described in Section 10 - Final Clean Up.

7.8 BORING AND JACKING OPERATIONS

A. General: Placement of pipe by boring or jacking methods requires special Utilities Department approval for each instance. However, as a general guideline, the following shall pertain:

1. Except for the use of air or water, the methods and equipment used in boring and jacking operations shall be optional to the contractor provided that the Utilities Department reviews them prior to any work.

2. The placement of pipe shall be to the lines and grades shown on the plans.

3. Voids remaining outside the pipe (or carrier pipe if applicable) shall be backfilled with concrete.

4. Where a casing pipe is used, it shall be no less than 8 inches greater in diameter than the sewer pipe to be installed.

5. The placement of pipe in casings shall be supported with redwood skids, shims or wedges to the lines and grades shown on the plans.

B. Bores: The boring machine shall cut a true circular bore to the required line and grade. The bored tunnel shall be no more than 2 inches (50 mm) larger in diameter than the maximum outside diameter of the casing or sewer pipe to be installed.

C. Jacked Steel Casings: In addition to applicable portions above, the following shall pertain:

1. Where casings are used, the size and wall thickness of the casing shall be at the contractor's option except that the minimum casing thickness shall be not less than 3/8 inch.

2. Field joints of steel casings shall be welded with a continuous circumferential weld.

3. The placement of pipe in casings shall be supported with redwood skids, shims or wedges to the lines and grades shown on the plans.

4. Prior to backfilling the annular space between the pipe and casing, the pipeline shall be tested in accordance with Section 9-0, Testing.

5. The annular space shall be backfilled with washed concrete sand blown or rammed into place until the entire cavity is filled. Concrete bulkheads shall be placed at each end of the cased section to retain the backfill material.

7.9 RESURFACING AND RESTORATION

If the wastewater work shall occur in streets where no paving exists, the contractor shall, in accordance with City and County requirements, leave the completed trenches in a suitably compacted condition for finish grading, placement of base material, and paving by others.

If the work is within existing City or County streets, any required resurfacing shall be in accordance with the City or County encroachment permit. Plate 33 (Public Works Plate F-4) is included for information for City streets.

If the work has disturbed or damaged existing private streets, alleys, driveways or other improved surfaces, the damaged portions shall be removed and restored, including the provision of adequate subgrade where these operations have disturbed the original material.

Structures removed or damaged on public or private property shall be restored or replaced unless such structures are designated on plans "to be abandoned." Such structures include, but are not limited to, trees, bushes, plantings, ground cover, mail boxes, fences and sprinkler systems.

Any temporary paving, barricades, or special provisions required by public agencies shall be furnished by the contractor as required.

7.10 CONCRETE AND MORTAR WORK

A. Concrete

1. Material: Concrete used for manholes, encasements, filling, blocking, piers and other typical wastewater construction applications shall be transit-mixed concrete from a supervised batch plant which issues certified delivery tickets with each load, showing the mix proportions, mixing time, truck departure time and water added. Such certified tickets will be handed to the inspector at the time of delivery. Ready-mixed concrete shall be batched and handled in accordance with ASTM C94. Job mixed concrete shall be limited to that needed for patching and minor non-structural uses requiring one sack of cement or less. In these cases, the materials and workmanship shall be the same as if transit-mixed concrete had been used. The 28-day compressive design strength of concrete shall be chosen according to its intended use as outlined in Section 3 of these standards.

2. Placement: Concrete shall be placed in clean forms before its initial set begins, using the minimum amount of mixing water required for good workability. Concrete shall be worked into forms by rodding or vibrating to secure a dense homogeneous mass free from voids and rock pockets. All concrete shall be vibrated unless the inspector approves solely rodding to avoid having the concrete run out of the forms or trench.

3. Finish: Concrete surfaces to be in contact with sewage shall be steel trowelled to a smooth hard surface free from ridges, holes, and surface roughness. Exposed walls shall be left with a surface finish comparable to that obtained with new plywood forms. Slabs and walkways shall be finished with a wood float unless otherwise specified. Corners and edges shall be neatly beveled. Surface defects shall be repaired to match the surrounding concrete.

B. Mortar: Mortar shall consist of one part Type II Portland Cement, and two parts of sand, by volume, throughly mixed in a dry state before adding sufficient water to give the mortar a proper trowelling consistency.

7.11 MANHOLE BASES

A. Manhole bases for precast manholes are intended to be poured against native undisturbed material, which has been excavated to the dimensions shown on the plans and plates. If the contractor over-excavates beyond the horizontal dimensions shown, it will be necessary to construct forms and pour the base to the specified dimensions.

B. Concrete shall be poured to a level ring-section seating surface, with the base centered over the sewer intersection unless otherwise specified.

In order to provide for a watertight manhole, a metal forming ring is recommended to form a level joint groove in the fresh concrete. This groove will be used to receive the first barrel section of the manhole.

C. Flow channels and shelves shall be either completed at the time the manhole base is poured or shall be left sufficiently low and wide so that the finish mortar work will be an integral layer at least 2 inches (50mm) thick. The flow channels shall be completed in a uniform U shape to fit the dimensions of the pipes being joined. Channel sides shall rise vertically to the full interior height of the outlet, and channels shall be surrounded by clearly defined working shelves sloping at least 1 inch per foot (s=0.0833) toward the main channel.

D. All embedment materials under, around, and at least 3 inches (75mm) over all pipelines located within 5 feet (1.52m) of structure bases shall be compacted without jetting prior to barrel section placements.

D. Concrete in the manhole bases for PVC and ABS pipe shall be extended along the pipes to the defined trench unless it can be demonstrated that there is sufficient compaction in this region.

7.12 MANHOLES

A. General: All materials for pre-cast manhole sections shall conform to the requirements set forth in Section 3. The applicable plate will depend upon the depth of the manhole as listed on the plates.

Precast manholes shall have a minimum wall thickness of 6 inches (150mm). Where there is a question of quality and conformance to the material specification, the Utilities Department will render the decision.

Drop manholes shall be set on poured concrete bases which provide integral support for the outside drop assembly.

B. Assembly of Precast Manholes: All wall and floor joints shall be cleaned prior to setting any manhole sections. These sections shall be set into position using a preformed plastic sealing gasket (Federal Specification SS-S-00210) or mastic sealing gasket. If the plastic gaskets are used, they shall be in strict conformance with the manufacturer's recommendations including application of a primer coat, drying the joint and careful use of the gasket to avoid displacement. If a mastic is used, it shall be first approved by the inspector and shall be of sufficient size and placed to provide a tight joint. Grouting with mortar will only be allowed for the joint between the manhole base and the first barrel section, and then the grout shall be placed to tightly exclude groundwater.

Each section shall be placed in alignment with the previous section such that the steps are aligned and opposite to the main sewer outlet.

The top of the eccentric cone section shall be set at such a elevation that not more than an 18 inches (450mm) height of entrance, or manhole throat is present with the manhole cover at finish grade.

C. Adjustment to Street Grade: The contractor shall set the transition section after the finished street elevation is known. The developer or his agent shall coordinate the fitting of entrance sections, top steps and covers with the final paving so that the finished manhole covers blend neatly with the street surface. Successful completion of the testing of wastewater line does not relieve the contractor from making these final adjustments. The contractor shall also be required to make any adjustments in the manhole cover sections during the one-year guarantee period if there is additional paving work. During final grading, paving and manhole adjustment, all debris shall be excluded from the completed work.

D. Transitions, Flow Channels: Mainline grade changes at manholes shall occur in the outlet sewer at the outside face of the manhole. Alignment changes shall be made in smooth curves, and size changes shall taper uniformly between inlet and outlet pipe walls. Also refer to Section 7.11 - Manhole Bases for further discussion.

E. Other Requirements: All PVC or ABS pipes entering or leaving concrete structures, including manholes, shall have a rubber sealing gasket, as supplied by the pipe manufacturer, firmly seated perpendicular to the pipe axis, around the pipe exterior and cast into the structure as a water stop.

7.13 CLEANOUTS

A. General: Cleanouts shall be brought to finish grade in smooth turns having the same internal diameter as the sewers which they serve. Cast iron frames and covers having clear openings at least equal to the internal pipe diameter shall be independently supported over the cleanout opening, in accordance with appropriate plate.

7.14 SERVICE LATERALS

A. General: Contractor shall install only those service laterals shown on the plans or called for in writing by the Utilities Department, or by the developer with the written approval of the Utilities Department. Workmanship shall be equal to that specified for the street sewers. No service lateral shall be covered until its location has been recorded by the developer's engineer.

The contractor shall mark the location of all sewer laterals with the letter "S" at least 2 inches high engraved into the curb. In laterals for vacant lots where no concrete curbs exist, contractor shall furnish and place 2" x 2" x 12" long hubs at the property line directly above the end of the pipe, with the letters "H.L." and the depth to the lateral marked on the hub with paint. Trenches shall be compacted in accordance with Section 7.7 of these Standards.

B. Residential House Laterals: Unless otherwise shown on plans, laterals shall be installed from the street sewer to the lot line in accordance with Plate No. 23, and plugged at the lot line in preparation for the leakage test. Laterals shall consist of factory-made standard wye-branch or tee fittings with ends to suit the street sewer pipe, tilted 30° upward and plugged with factory-made removable plugs. Wyes shall face in a logical manner to facilitate future installation of house laterals to the properties to be served. The branch portion shall be firmly bedded in damp imported sand under, over, and around the future inlet.

C. Laterals from Certain Commercial and Industrial Premises: These require special features and access for sampling as described in Plate No. 29 of these Standards. Refer to section 2.13 for discussion of the wastewater ordinance.

D. Deep Laterals or Chimneys: No lateral connected to a street sewer shall slope more steeply than 45 degrees unless it shall be constructed as a vertical chimney as shown as alternate in Plate No. 25. Laterals sloping more than 30 degrees, but less than 45 degrees shall be cradled in concrete as shown in Alternate A, Plate No. 24. Lateral sloping 30 degrees or less shall be bedded and laid to the same standards as street sewers, without need for cradling in concrete. Up to four services may be connected to a single chimney, providing all connections are made to standard single or double wye fittings.

E. Backflow Protection: Where the contractor's work includes backflow devices on private property, as specifically called for on plans, such devices are to be placed in well drained locations near the premises being protected, with unobstructed access for observation and repair.

7.15 SAFETY

Wherever the contractor is aware of un-safe operations, such should be discontinued immediately. Also, if the inspector is aware of such conditions and informs the contractor of same, it will be the contractor's responsibility to comply. In such instances, the advice shall not be construed as implying any City liability.

With regards to entering manholes, the contractor (and designer) should be aware of the following:

1. Unconsciousness may be caused by lack of sufficient oxygen in the manhole or sewer atmosphere. This unconsciousness can occur SUDDENLY and with NO WARNING, causing unconsciousness and possibly death in from three to five minutes.

2. All manholes, unventilated for any considerable time, are deficient in oxygen, particularly terminal manholes. Also manholes on large sewers are often dangerous because of toxic and corrosive gases in addition to deficient oxygen.

3. Because the sewer atmosphere may be explosive due to the leakage into the sewer from nearby conduits transporting gas, gasoline, or other explosive materials, the use of an open flame in or near the top of an open manhole is dangerous.

4. All manholes shall be ventilated before entering. In shallow manholes on small sewers this may be accomplished by removing the manhole cover and waiting for at least five minutes allowing ventilation by the air currents across the top of the manhole. In manholes on large sewers, it may be necessary to use blowers on upstream or downstream manholes to secure adequate ventilation.

5. Warning devices to provide adequate warning to motorists of the work in progress should be used where the manhole is in a traveled roadway.

7.16 CLEANING OF SEWERS

See Section 10.1.

◆ 8 – Abandonment

SECTION 8.0

ABANDONMENT

8.1 GENERAL

All existing wastewater lines or structures which are to be abandoned shall be indicated on the drawings by the developer's engineer. In general, abandoned lines which are in service will be replaced with a parallel line of equal or larger size, and the engineer shall demonstrate in any case that the abandonment does not adversely affect the wastewater system.

All abandonment and construction techniques shall be discussed with the Utilities Department inspector and approved prior to any such work.

8.2 WASTEWATER LINES

Wastewater lines to be abandoned shall be entirely filled by pumping concrete into them. The pump mix shall be a mixture sufficiently workable for the purposes intended and shall be a concrete mix of 2000 psi minimum. Laterals to be abandoned shall be plugged at the property line or as directed by the Utilities Department.

8.3 STRUCTURES

Structures to be abandoned shall have all openings, inlets and outlets sealed off as set forth in Section 8.2 of these Standards. The structure shall then be removed to a minimum depth of 9 feet below proposed finish grade and filled with imported sand (see materials section) if structure is within street right-of-way or filled with earth and compacted if outside of street right-of-way.

8.4 SALVAGED MATERIALS

Disposal of salvaged metal castings such as frames and covers and other metal appurtenances, unless otherwise specified, shall be the contractor's responsibility.

9 – Testing

SECTION 9.0

TESTING

9.1 WASTEWATER LINES

All completed sewers, force mains and building laterals, will be tested by and at the expense of the contractor in the inspector's presence prior to field acceptance of the work, and prior to connection of any house sewer. The contractor must correct all defects in workmanship or materials which become evident by inspection or testing at any time during the work. Testing will be done after the complete installation and compaction of all underground utilities.

A. Air Test: After plugging all openings and providing thrust blocking as necessary, air shall be admitted to the section under test at an inlet pressure not exceeding 5 psi (0.034MPa) from a source regulated by an adjustable pressure control valve and measured by a sensitive pressure gauge calibrated from 0 to no more than 10 psi (0 to 0.07MPa). When the internal gauge pressure has reached 3.5 psi (0.024MPa) under stabilised temperature conditions, the air supply to the test section shall be cut off. The inspector shall then observe the time interval during which the internal pressure drops from 3.5 to 2.5 psi (.025 MPa - .018 MPA). The length of time for such loss shall not be less than that shown in the following table for the street sewer size being tested and also for the length of main line being tested:

MINIMUM TIME (MINUTES)
FOR AIR LOSS FROM 3-1/2 TO 2-1/2 PSI

	Length of Line (feet)							
Pipe Diameter	0 to 100'	101' to 150'	151' to 200'	201' to 250'	251' to 300'	301' to 350'	351' to 400'	401' to 500'
6	1	1-1/4	1-1/2	2	2-1/4	2-1/2	2-3/4	3-1/2
8	1-3/4	2	2-1/2	3	3-3/4	4-1/4	5	6
10	2	2-3/4	3-1/2	4-1/4	4-3/4	5-1/4	6	7-1/2
12	2-1/4	3	4	4-3/4	5-1/2	6-1/4	7-1/4	9
15	3	3-3/4	4-3/4	5-1/2	6-1/4	7-1/4	8-1/2	10-1/2
18	3-3/4	4-1/2	5-1/4	6	7-1/4	8-1/2	9-1/2	12

Test plugs for any air test shall not be removed until the pressure is no longer measurable. Air shall be released slowly through a valve. If the pipe to be tested is submerged in groundwater, determine the back pressure due to groundwater submergence and increase all gauge pressures in the test by that amount.

1. Failure to Meet Air Test Requirements: If the air test shall indicate leakage greater than the specified limits, the contractor shall locate the defects by inspection and shall make such repairs and replacements as are necessary. To locate the section of sewer which fails the air test, various methods may be used; such as: remote cameras, adjustable low pressure air devices or the line filled with water by plugging the inlet of the downstream manhole and maintaining at least a 2 feet depth over the outlet of the upstream manhole until the leaks are located by observing wet spots along the trench. Water shall be drained in a manner approved by the inspector. Under no conditions shall clay, cement, or other sealer be applied inside the pipe in order to meet the test requirements. All defective portions shall be exposed and repaired or replaced, including defective bedding, to the satisfaction of the inspector.

B. Leakage Test: In special cases, a water exfiltration test may be required as described below.

Wastewater line shall be tested between successive manholes by plugging the lower end and the inlet of the upper manhole. The pipe and manhole shall be filled with water to a point 4 feet above the invert at the center of the upper manhole, or in the presence of groundwater, 4 feet above the average adjacent groundwater level. The allowable leak shall be computed as follows over a period of at least a one-hour test:

$$E = 0.00002\ LD\sqrt{H}$$

L = Length of line being tested including laterals in feet
D = Internal diameter of pipe in inches
E = Allowable leakage in gpm
H = Elevation between upper manhole water surface and invert of pipe at lower manhole (or if groundwater present, upper manhole water surface and groundwater level at lower manhole).

C. Pipe Diameter Ring Deflection Test of ABS and PVC Pipe: Upon completion of the backfill and road sub-base (if applicalbe), and prior to acceptance of the air test, each main pipe line shall be checked for ring deflection by pulling a template or mandrel through the main pipe line. This

test shall be a minimum of 4 days after backfilling operations are completed. The mandrel shall be cylindrical in shape with a diameter as follows:

Nominal Pipe Diameter	PVC Minimum Mandrel Size	ABS Minimum Mandrel Size (Composite Pipe)
6"	5.50"	---
8"	7.37"	7.47"
10"	9.23"	9.40"
12"	10.98"	11.33"

The above mandrel sizes are based upon four percent deflections for ABS composite and five percent deflections for PVC pipes including allowances for out-of-roundness due to manufacturing plus statistical manufacturing tolerances. The mandrel length shall be a minimum of one nominal pipe diameter. The mandrel shall be constructed so as not to "hang-up" at joints and shall be "nine pointed." If it does not pass through the pipe, it is assumed that the pipe deflection exceeds the allowable and as such, the pipe section or sections shall be removed and replaced, at no City expense, to the satisfaction of the Utilities Department. If requested, the mandrel shall be checked by the inspector to determine if it meets the size requirements.

In addition, the Utilities Department reserves the right to check the ring deflection in the pipe line at any time during the period up to one year from the date of the field inspector's acceptance of the work. If required, the contractor shall be responsible for this additional testing with the limitation that the City will be responsible for testing in excess of one additional passing test per any one section of pipe between adjacent manholes. Any defective pipelines shall be repaired or replaced at no City expense.

9.2 BACKFILL MATERIALS

A. Gradation Curves and Sand Equivalency Determinations: Sieve analyses gradation curves and sand equivalency determinations shall be made by an independent testing laboratory on representative materials for the bedding and haunching materials. If requested, written results are to be submitted to the Utilities engineer for approval prior to backfilling with any of the tested material.

9.3 COMPACTION TESTS

These tests will be required for PVC and ABS pipe along the pipeline in the haunching area. A minimum one test per 800 feet (244m) of pipeline spaced approximately equidistant along the pipeline shall be taken by an independent

testing laboratory. The compaction requirement is as discussed in Section 7 (ASTM D698 or better). If requested, written results including the compaction curve shall be submitted in writing to the Utiltiies Department.

9.4 TELEVISION INSPECTION

This subject is covered in sections 5.4 and 7.2.

◆ 10 – Wastewater System & Work Area Cleanup

SECTION 10.0

WASTEWATER SYSTEM AND WORK AREA CLEAN UP

10.1 CLEANING OF WASTEWATER SYSTEM

Upon satisfactory completion of the air test and after all necessary repairs and adjustments have been made, including setting manhole frames to final elevations, the entire new system of sewers and manholes shall be cleaned. Before beginning the cleaning operation, a standard sand trap (Southwest Flexible Co. or equal) shall be placed in the manhole at which the new work connects to the City's system, and it will remain in place until all solid matter has been removed. Under no conditions shall material other than clear flushing water be discharged into the City's system before final acceptance of the new work. Splattered mortar and all irregularities shall be removed from the flow channels, leaving smooth dense uniform surfaces finished in a thoroughly first class manner.

A hydraulically propelled ball will be used to clean the entire system of new sewers. Those sections which cannot be visually inspected by mirroring between manholes will be cleaned only in the presence of a City inspector. Prior to the beginning of this work by the City, excessive amount of debris shall be removed by the Contractor.

Solid material washed into the lowest manhole(s) shall be removed from the system. The standard sand trap between the new work and the City's system shall be removed only after the Director has given final approval of all phases of the work.

10.2 FINAL PROJECT CLEAN UP

Upon completion of all backfilling, paving, or repaving, manhole cover adjustments, testing, and sewer cleaning, the work site will be cleaned of construction debris by the contractor. All private improvements damaged during construction shall be restored to at least the original condition of said improvements including but not limited to trees, shrubs, curbs, gutters, sidewalks, fences, grass, etc. Filled excavations in private property shall be neatly finished in a manner to facilitate natural drainage and eliminate hazards to persons or property. The project shall be left in a final condition which brings no discredit to the City.

◆ 11 – Requirements For Final Acceptance

SECTION 11.0

REQUIREMENTS FOR FINAL ACCEPTANCE

11.1 FIELD ACCEPTANCE

After satisfactory completion of the improvements, the Utilities inspector will provide a field acceptance letter to the Director. However, it shall be the developer's responsibility to initiate action and supply the required administrative items for official City Council acceptance of the improvements.

11.2 "AS-BUILT" ORIGINALS

Original "As Built" drawings and two sets of blueline prints shall be submitted to Utilities Department. The "As Built" shall reflect the actual improvements made and give the accurate location of all new/or relocated facilities. The following certificate shall be signed and shall appear on the cover sheet of the wastewater plans:

"As Built" Certificate

I hereby certify that the work shown on drawing_____ sheet_____through_____ marked "As Built" has been constructed in conformance with lines and grades and requirements as shown on said plans, drawings and referred specifications.

_____ _____ _____

Registered Civil Engineer Number Date

11.3 WASTEWATER CONNECTION FEES

Developer shall pay, or make arrangements, satisfactory to the Utilities Department, to pay wastewater connection fees in accordance with Title 10 Chapter 1 of the Municipal Code.

11.4 ON-SITE PLUMBING FIXTURE PLANS

An approved plumbing plan of on-site plumbing fixtures must be submitted to Utilities Department by developer to compute wastewater connection fees in accordance with Title 10, Chapter 1 of the Municipal Code.

11.5 NOTICE OF COMPLETION

The developer shall submit a copy of the recorded notice of completion of the wastewater system to the Utilities Department.

11.6 GRANT DEED

The developer shall submit the original unrecorded grant deed executed by the developer conveying the system to the City, this includes notarization of all signatures.

11.7 ITEMIZED COST/ADDITIONAL FEES

A certified and itemized copy of the cost of the facilities offered for dedication shall be submitted. Such certification should consist of copies of the signed contractual agreement with any change orders. If the final cost is found to be more than the originally approved engineer's cost estimate, developer shall pay the City an additional amount of plan check fee and inspection fee, based on the difference between the estimate and the final cost, based on the current rates of such fees.

11.8 APPROVAL FOR ACCEPTANCE

When all requirements (field and administrative) have been met, staff will prepare a resolution recommending City Council acceptance of the improvements and exoneration of the performance bond (10 percent of the performance bond remains in force for the one-year maintenance and guarantee period). Results of the action will be provided to the developer and his surety. Once City Council acceptance has been approved, occupancy of the homes/premises will be granted.

Whereas, the normal maintenance and guarantee period is one year and the bond retention 10%, both of these may be increased if in the opinion of the Utilities Department the normal period and amount are not sufficient.

11.9 STATUS DURING MAINTENANCE AND GUARANTEE PERIOD

The developer/contractor is responsible for the full guarantee period for the proper cleaning and maintenance of the wastewater system. Should City crews have to perform any of this work, the costs for same will be invoiced to the developer/contractor.

References

American Association of State Highway Officials' Standard Specifications

American Society of Testing Materials including but not limited to the following:

A185 - Specification for Welded Steel Wire Fabric for Concrete Reinforcement

A615 - Specification for Deformed and Plain Billet-Steel Bars for Concrete Reinforcement

A746 - Specification for Ductile Iron Gravity Sewer Pipe

C94 - Specification for Ready-Mixed Concrete

C150 - Specification for Portland Cement

C301 - Test for Vitrified Clay Pipe

C425 - Specification for Compression Joints for Vitrified Clay Pipe and Fittings

C443 - Specification for Joints for Circular Concrete Sewer and Culvert Pipe, Using Rubber Gaskets

C478 - Specification for Precast Reinforced Concrete Manhole Sections

C700 - Specification for Vitrified Clay Pipe, Extra Strength, Standard Strength, and Perforated

D448 - Specification for Standard Sizes of Coarse Aggregate for Highway Construction

D698 - Tests for Moisture-Density Relations of Soils, Using 5.5 lb (2.5kg) Rammer and 12 in.(300mm) Drop

D1248 - Specification for Polyethylene Plastics Molding and Extrusion Materials

D2235 - Specification for Solvent Cement for Acrylonitrile-Butadiene-Styrene (ABS) Plastic Pipe and Fittings

D2321 - Recommended Practice for Underground Installation of Flexible Thermoplastic Sewer Pipe

D2680 - Specification for Acrylonitrile-Butadiene-Styrene (ABS) Composite Sewer Piping

D2751 - Specification for Acrylonitrile-Butadiene-Styrene (ABS) Sewer Pipe and Fittings

D3034 - Specification for Type PSM Polyvinyl Chloride (PVC) Sewer Pipe and Fittings

D3212 - Specification for Joints for Drain and Sewer Plastic Pipes Using Flexible Elastomeric Seals

City of Thousand Oaks Sewer Master Plan (1972)

City of Thousand Oaks Municipal Code

Clay Pipe Engineering Manual published by the National Clay Pipe Institute

Design and Construction Handbook of PVC Pipe published by Uni-Bell Plastic Pipe Association

Design and Construction of Sanitary and Storm Sewers
ASCE Manual of Engineering Practice No. 37 or WPCF Manual of Practice No. 9

Federal Specification SS-S-00210 as it regards to preformed plastic sealing gasket

Road Encroachment Regulations, Ventura County

Standard Specifications - State of California Business and Transportation Agency, Department of Transportation Standard Specifications (CALTRANS)

State of California Department of Industrial Relations, Division of Industrial Safety "Construction Safety Orders"

Truss Pipe Semi-Rigid Sewer Pipe System Design Manual published by Armco Steel Corporation

Uniform Building Code as amended by Building and Safety Department, City of Thousand Oaks

Uniform Plumbing Code as amended by Building and Safety Department, City of Thousand Oaks

United States Coast and Geodetic Survey (U.S.C. and G.S.) for mean sea level datum adjusted 1961

Index

Abandonment of line and
  stuctures, 8.0, 7.4
ABS composite pipe, 3.4
  backfill & compaction, 7.7
  bedding & laying, 7.6
  load factors, PL 11
  mandrel test, 9.1
  sizes, 2.1
  trench sections, PL 7
Agreements, 5.6
Air Test, 9.1
Alignment, pipe, 2.2, 2.3
Anchor Block, PL 14
As Built, plans, 5.0
  certificate, 11.2
Authorization for
  construction, 5.0

Backfill, materials, 3.6
  methods, 7.7
Backflow Protection, 3.6,
  PL 28
"Bandseal" pipe, 3.3
Bonds, 5.6
Bores, 7.8

Casing, 7.8
Check Dam, PL 15
Chimney, 7.14
  details, PL 25
Cleanouts, design, 2.9
  construction, 7.13
  details, PL 26
Clean Up, work area, 10.0
Clearing & Grubbing, 7.3
Compaction, methods, 7.7
  tests, 9.3
Concrete, 3.11, 7.10
Connection Charge, 5.8
Construction, general, 7.1
  staking, 6.0
Cost, itemized, 11.7
Cover sheet, 4.4
Curves, 2.6

Deed, grant, 11.6
  easement, 2.3
Definitions and terms, 1.3
Diameter, min. pipe, 2.1
Drop manholes, 2.8
Ductile Iron Pipe, 3.3

Easement, design, 2.3
  standard language, 4.10
  general provision, 2.3
Encasement, PL 12, 13
Encrochment permit, 7.2
Excavation & trenching, 7.5
Explosives, 7.2

Fees, 5.1, 5.4, 5.8, 5.9, 11.3, 11.7
Final Acceptance, 11.0
Flow, peak to average, PL 2
Force mains, 2.13

Grant Deed, 11.6

Horizontal curves, design, 2.6
Hydraulics, 2.1

Industrial Waste Discharge, 2.14
  sampling well, PL 29
Inspection, general, 7.1
  fees, 5.4
  television, 9.4, 7.1
Insurance Certificate, 5.6

Joints, flexible, 2.11
Jurisdiction, Utilities Dept., 1.6

Laterals, service, 2.10
Lift Station, 2.13
Load Factors, PL 10-11
Location of lines, 2.2, 2.3

Manhole design, 2.8
  materials, 3.9, 3.10
  construction, 7.12
  details, PL 17-22
  slopes of channels, 2.8
Maps, index, vicinity, 4.4

Materials, general, 2.7, 3.0
pipetypes 3.3, 3.4, 3.5
pipe trench, 3.6
roadway, 3.8
Maximum & minimum grades, 2.4

Notice of Completion, 11.5

Oak trees, 7.3
Occupancy, 1.9
Oversizing of lines, 2.3

Permits, 7.2
Pipe, hydraulics, 2.1
slopes of, 2.4
depth, 2.5
curves, 2.6
materials, 2.7
structural requirements, 2.11
abandonment, 8.0
bedding & laying, 7.6
trench terminology, PL 3
Plan Preparation, 4.0
Plastic pipes: See PVC and
ABS Composite
Private pumping system, 2.12
Private sewage disposal, 1.5
PVC pipe, 3.4
bedding & laying, 7.6
backfill & compaction, 7.7
mandrel test, 9.1
sizes & lengths, 2.1
trench sections, PL 6
load factors, PL 11

Reinforced concrete trench
lab, PL 9
Reinforcing steel, 3.12
Reverse curves, requirements, 2.8
Rigid pipes: See
VC (Vitrified Clay)

Saddle Connection, PL 27
Safety, 7.15
Sampling Well, PL 29
Separation Requirement, PL 30
Service laterals, design, 2.10
construction, 7.14
detail, PL 23
Shoring, 7.5
Slopes of pipes, 2.4
Staking, construction, 6.0
Steep slopes, PL 14,15,16
Storm drains, location
near sewer, 2.2
Streets
location of line within, 2.2
resurfacing & restoration, 7.9,
PL 33
Structural requirements, 2.11
Structures, abandonment, 8.0

Television inspection, 9.4, 7.1
Testing, 9.0, 3.2
Title block, PL 1
Tunnels, 7.8

Unit flows, 2.1
Utilities Dept. Jurisdiction, 1.6

VC (Vitrited Clay) pipe, 3.3
bedding & laying, 7.6
backfill & compaction, 7.7
sizes & lengths, 2.1
trench sections, PL 4-5
load factors, PL 10
Velocity, acceptable, 2.1
Vertical curves, design, 2.6

Plates

Plate No. 1	Standard Title & Revision Blocks
Plate No. 2	Ratio of Peak to Average Flow
Plate No. 3	Trench Cross-Section Terminology & Standard Sizes
Plate No. 4	Pipe Trench for VCP & Other Rigid Pipes LF = 1.5 & LF = 1.9
Plate No. 5	Pipe Trench for VCP & Other Rigid Pipes LF = 2.8 & LF = 3.4
Plate No. 6	Pipe Trench for PVC Pipe LF = 1.5, LF = 1.7, LF = 1.9
Plate No. 7	Pipe Trench for ABS Composite Pipe LF = 1.5, LF = 1.7, LF = 1.9
Plate No. 8	Other Pipe Trench Details
Plate No. 9	Reinforced Concrete Trench Slab
Plate No. 10	Load Factors - VC Pipe
Plate No. 11	Load Factors PVC and ABS Composite Pipe
Plate No. 12	Special Support for Wastewater Line Over, Under Obstruction
Plate No. 13	Pipe Encasements
Plate No. 14	Anchor Block
Plate No. 15	Redwood Check Dam for Steep Slopes
Plate No. 16	Concrete Filled Sand Bag Trench Detail for Steep Slopes
Plate No. 17	Standard 4' Dia Manhole
Plate No. 18	Drop Manhole
Plate No. 19	Shallow Manholes

Plate No. 20	5' (1.5m) Diameter Manhole
Plate No. 21	Manhole Securing Details - Undeveloped Areas
Plate No. 22	Miscellaneous Manhole Details
Plate No. 23	Service Lateral
Plate No. 24	Tee and Wye Support
Plate No. 25	Chimney
Plate No. 26	Cleanout
Plate No. 27	Saddle Connections to Main Line
Plate No. 28	Backwater Overflow Device
Plate No. 29	Sampling Well
Plate No. 30	Separation Requirements for Water and Wastewater Lines
Plate No. 31	Unit Cost for Estimating
Plate No. 32	Private Pumping Systems
Plate No. 33	Utility Trenches Compaction Specifications
Plate No. 34	Trench Repair Within Paved Right-of-Way

PLATE NO. 1

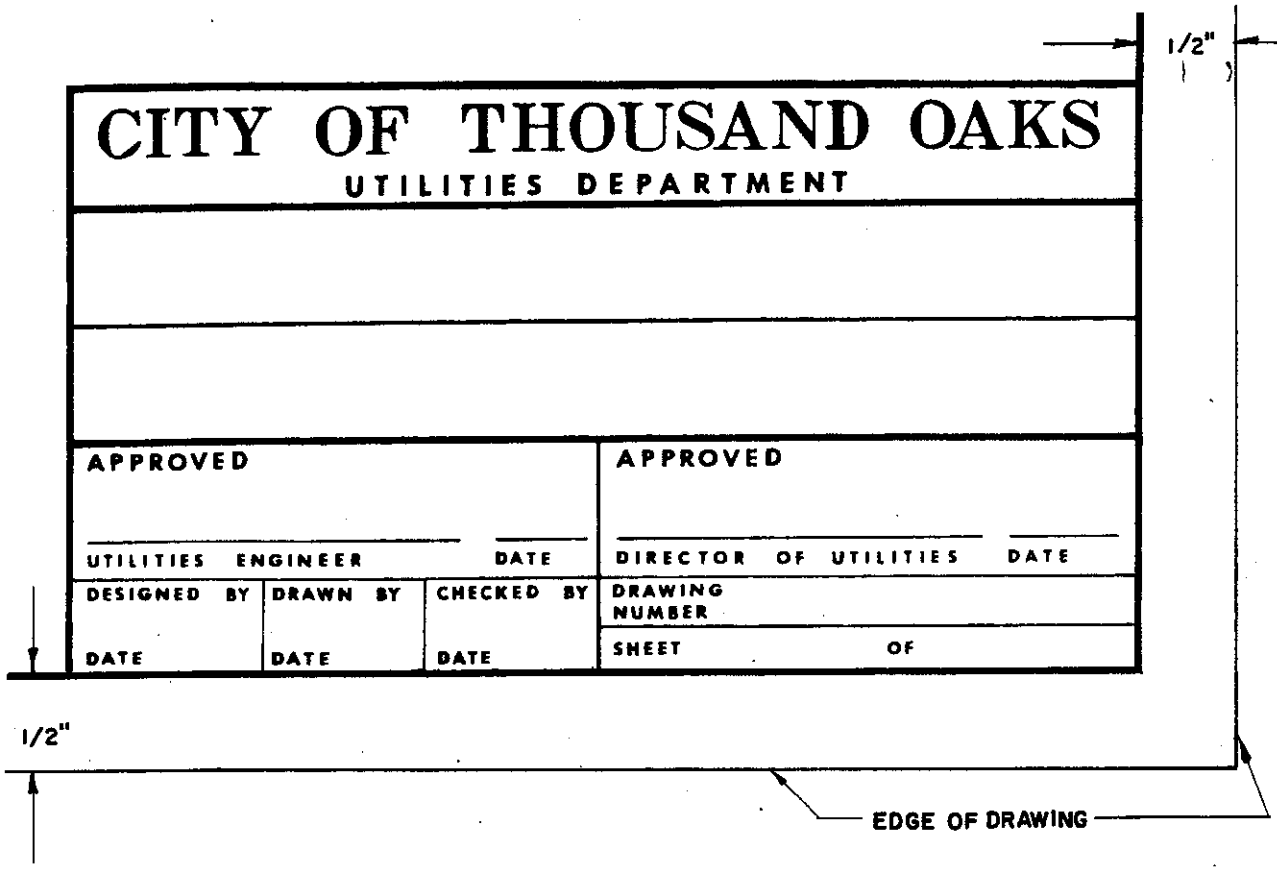

NOTES:

1) Title block shall contain the tract or other project identifying number as well as "wastewater" and the term "cover sheet" or street name(s) as applicable.

2) Deputy Director may sign for the Director on any plans.

REV.	SYM.	DESCRIPTION	R.C.E.	DATE	TYPE	D.U.	DATE

NOTE: Revisions (or change orders) must be signed by the Utilities Engineer, but need not be signed by the Director of Utilities.

CITY OF THOUSAND OAKS - UTILITIES DEPARTMENT

SUBMITTED Richard Bardin

APPROVED [signature]

ADOPTED BY THE CITY COUNCIL OF THE CITY OF THOUSAND OAKS 5/8/79

DRAWN BY: R. L.

CHECKED BY:

SCALE: NONE

REVISED:

CONSTRUCTION STANDARDS

STANDARD TITLE & REVISION BLOCKS

PLATE NO. 2

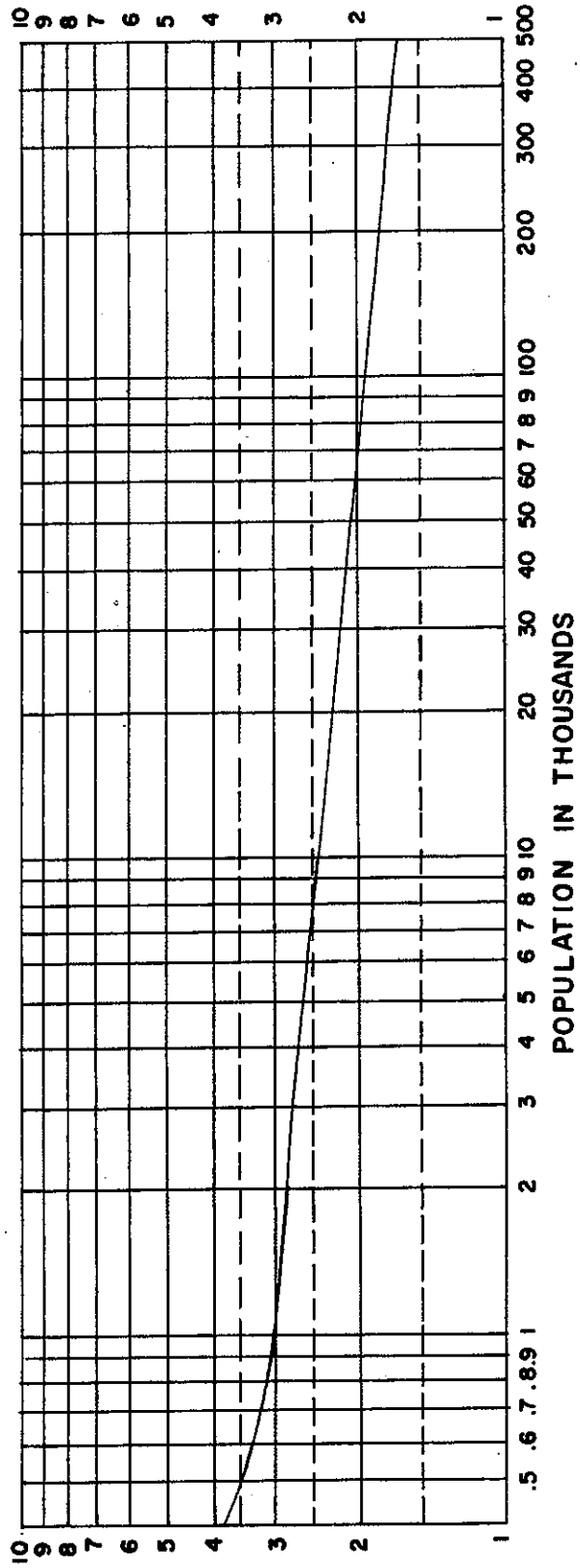

RATIO OF PEAK SEWAGE FLOWS TO AVERAGE DAILY FLOW
BASED ON 100 GALLONS PER CAPITA PER DAY

CITY OF THOUSAND OAKS - UTILITIES DEPARTMENT

SUBMITTED Richard Bardin

APPROVED _____

ADOPTED BY THE CITY COUNCIL OF THE CITY OF THOUSAND OAKS 5/8/79

DRAWN BY: R.L.
CHECKED BY:
SCALE: NONE
REVISED:

CONSTRUCTION STANDARDS

RATIO OF PEAK TO AVERAGE FLOW

PLATE NO. 3

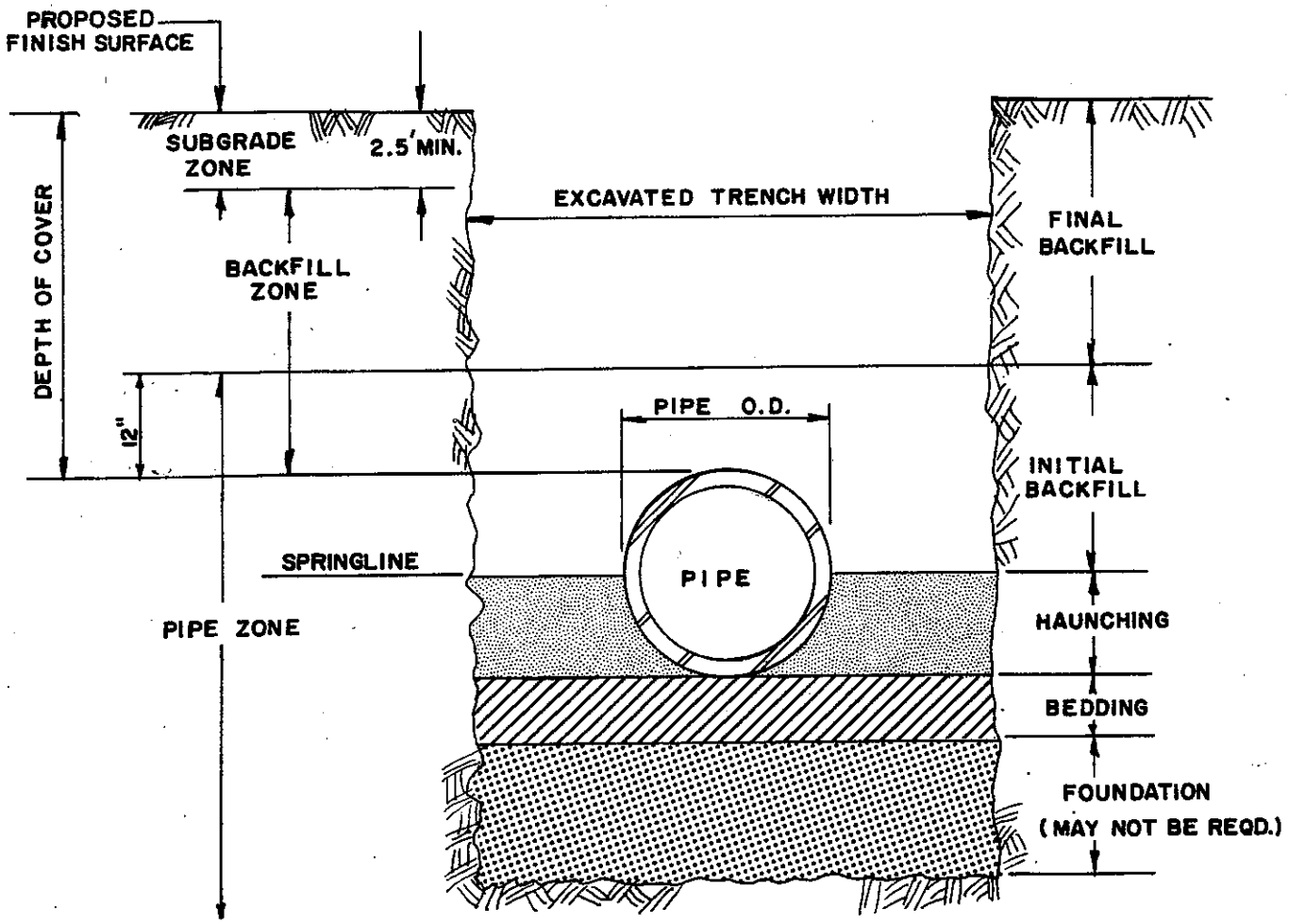

NOTES:

1) Standard depth of cover is 7 feet , however 5 feet is allowable in areas not expected to receive traffic such as easements.

2) Excavated trench width is normally a maximum of pipe O.D. plus 8 inches on each side.

CITY OF THOUSAND OAKS - UTILITIES DEPARTMENT

SUBMITTED Richard Bardin

APPROVED

ADOPTED BY THE CITY COUNCIL OF THE CITY OF THOUSAND OAKS 5/8/79

DRAWN BY: R. L.
CHECKED BY:
SCALE: NONE
REVISED:

CONSTRUCTION STANDARDS

TRENCH CROSS-SECTION TERMINOLOGY & STANDARD SIZES

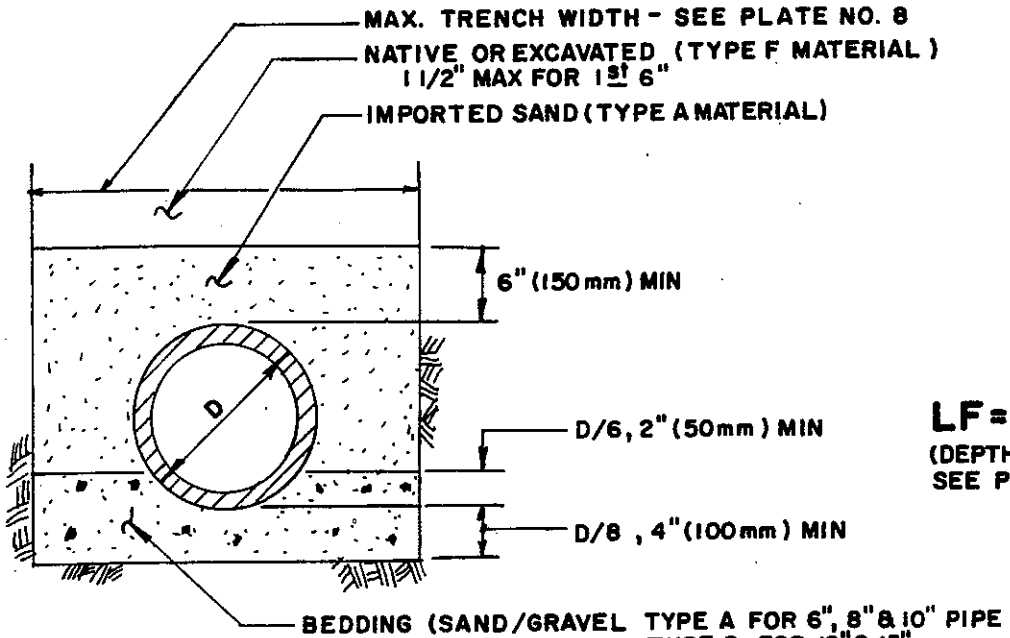

LF = 1.5
(DEPTH OF COVER SEE PLATE 10)

GENERAL NOTES:

1) MAT'L SPECS ARE IN SECT. 3.6 OF STANDARDS

2) HAND SHAPE BEDDING FOR CURVED PIPE AND BELLS

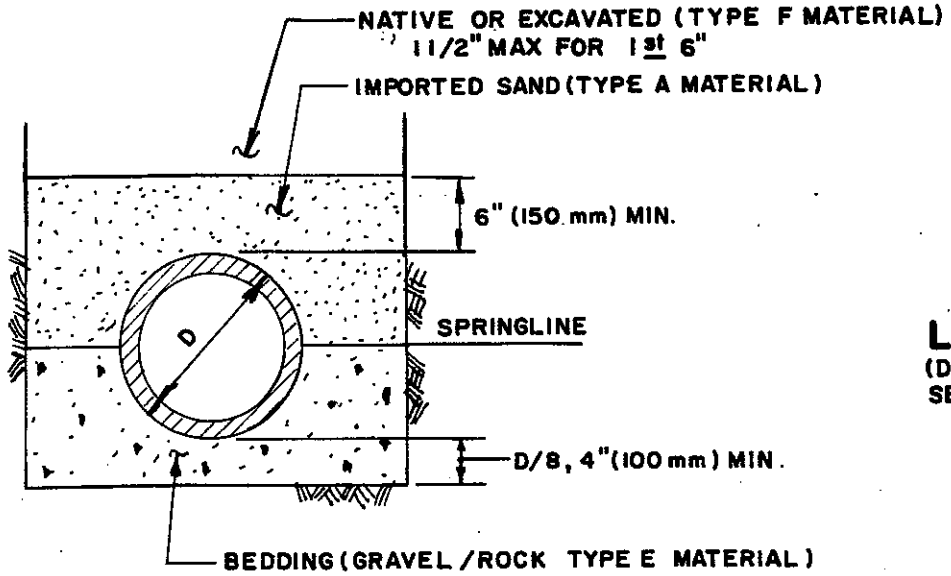

LF = 1.9
(DEPTH OF COVER SEE PLATE 10)

CITY OF THOUSAND OAKS - UTILITIES DEPARTMENT

SUBMITTED Richard Bardin	DRAWN BY: R. L.	CONSTRUCTION STANDARDS
APPROVED	CHECKED BY:	PIPE TRENCH FOR VCP & OTHER RIGID PIPES
ADOPTED BY THE CITY COUNCIL OF THE CITY OF THOUSAND OAKS 5/8/79	SCALE: NONE	LF= 1.5 & LF=1.9
	REVISED:	

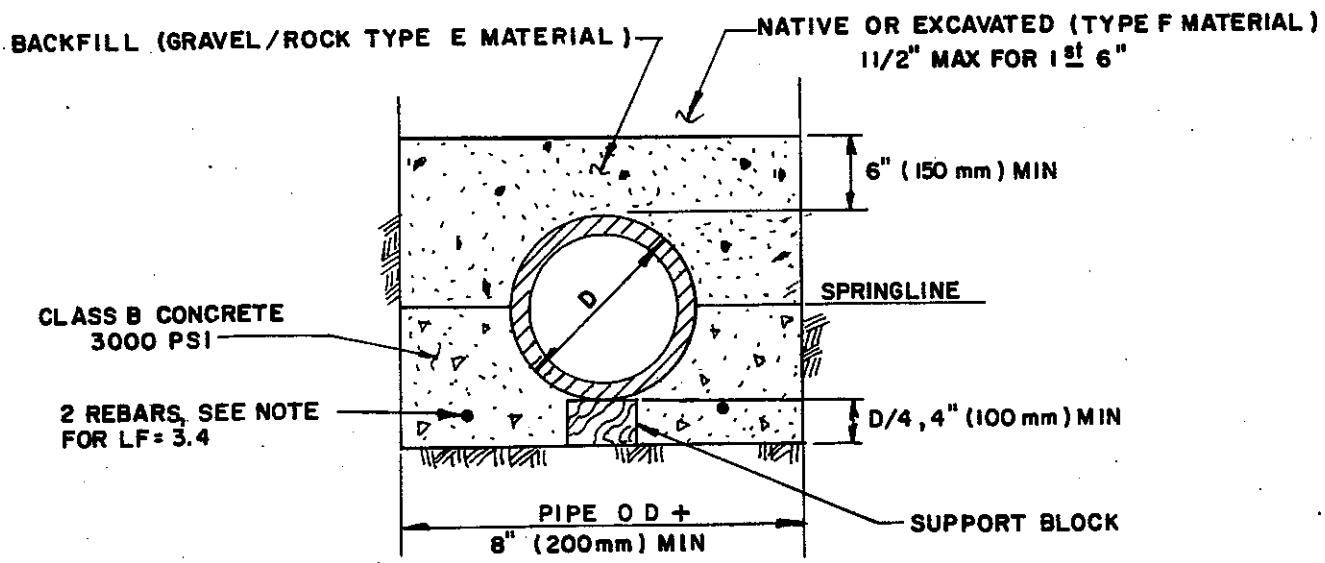

LOAD FACTORS

2.8 - As shown above without rebar.

3.4 - Reinforced concrete with p=0.4% min. Generally this is two No. 6 bars longitudinally for pipes 10" and smaller.

NOTES:

1) Material specifications are in Section 3.6 of Standards.

2) Provide a flexible coupling or pipe joint within 2' (0.6 m) of each cradle end, except where cradle abuts manhole in which case tie rebar must be extended into concrete base a minumum of 18" (450 mm).

3) Concrete to be vibrated or strongly rodded.

4) See Plate 10 for depth of cover.

CITY OF THOUSAND OAKS - UTILITIES DEPARTMENT

SUBMITTED Richard Bardin

APPROVED [signature]

ADOPTED BY THE CITY COUNCIL OF THE CITY OF THOUSAND OAKS 5/8/79

DRAWN BY: R. L.

CHECKED BY:

SCALE: NONE

REVISED:

CONSTRUCTION STANDARDS

PIPE TRENCH FOR VCP & OTHER RIGID PIPES LF=2.8 & LF=3.4

PLATE NO. 6

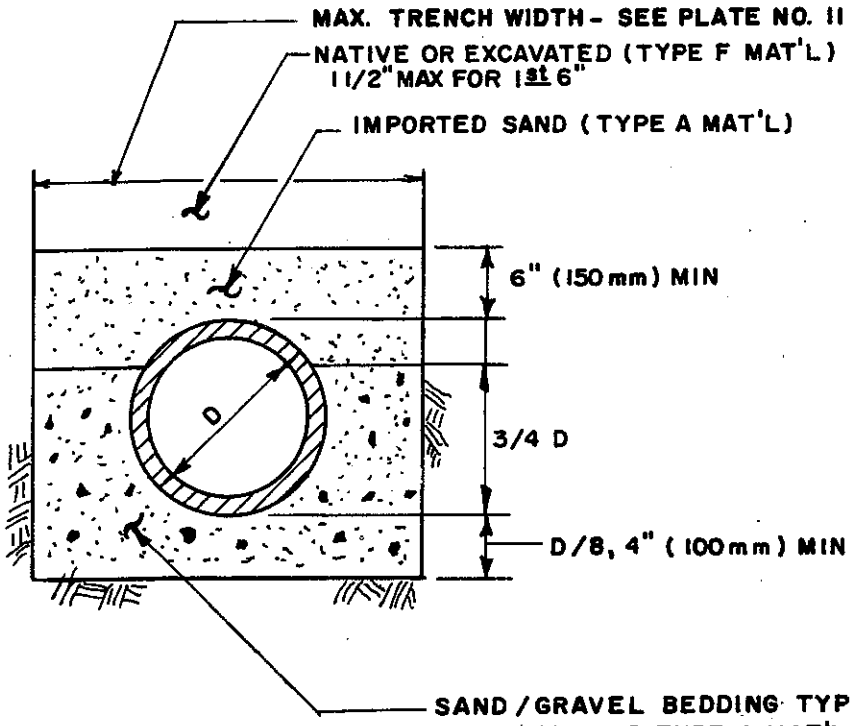

LF = 1.5 OR
LF = 1.7
(DEPTH OF COVER SEE PLATE 11)

GENERAL NOTES:

1) Material specifications are in Section 3.6 of Standards.
2) Hand shape bedding for pipe curvature.
3) Load factors shown are primarily for this purpose of identifying the proper detail.

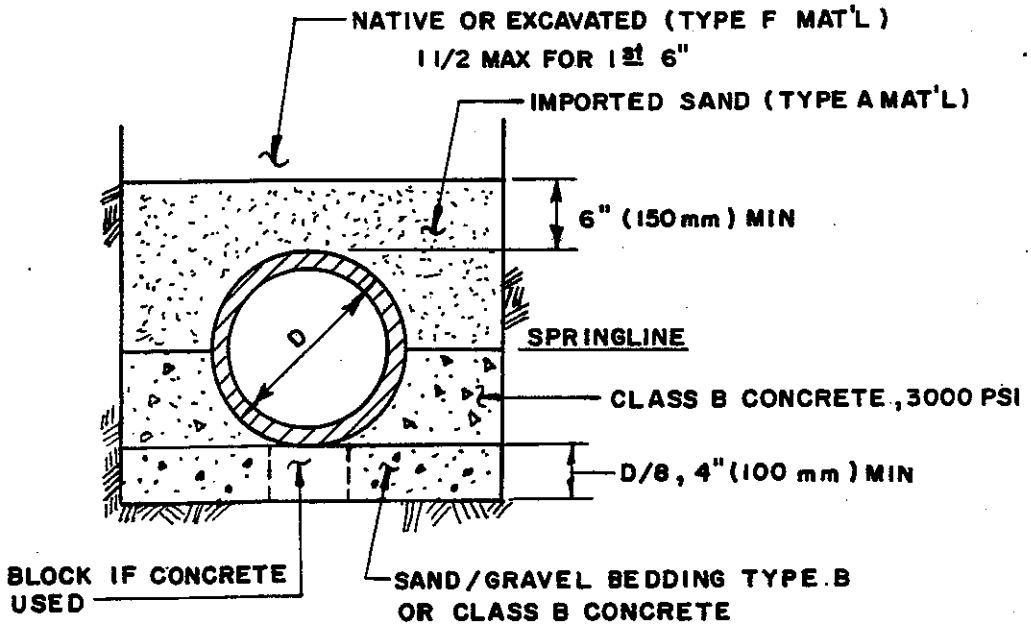

LF = 1.9
(DEPTH OF COVER SEE PLATE 11)

CITY OF THOUSAND OAKS - UTILITIES DEPARTMENT

SUBMITTED Richard Bardin	DRAWN BY: R.L.	CONSTRUCTION STANDARDS
APPROVED	CHECKED BY:	PIPE TRENCH FOR PVC PIPE LF=1.5, LF=1.7, LF=1.9
ADOPTED BY THE CITY COUNCIL OF THE CITY OF THOUSAND OAKS 5/8/79	SCALE: NONE	
	REVISED:	

PLATE NO. 7

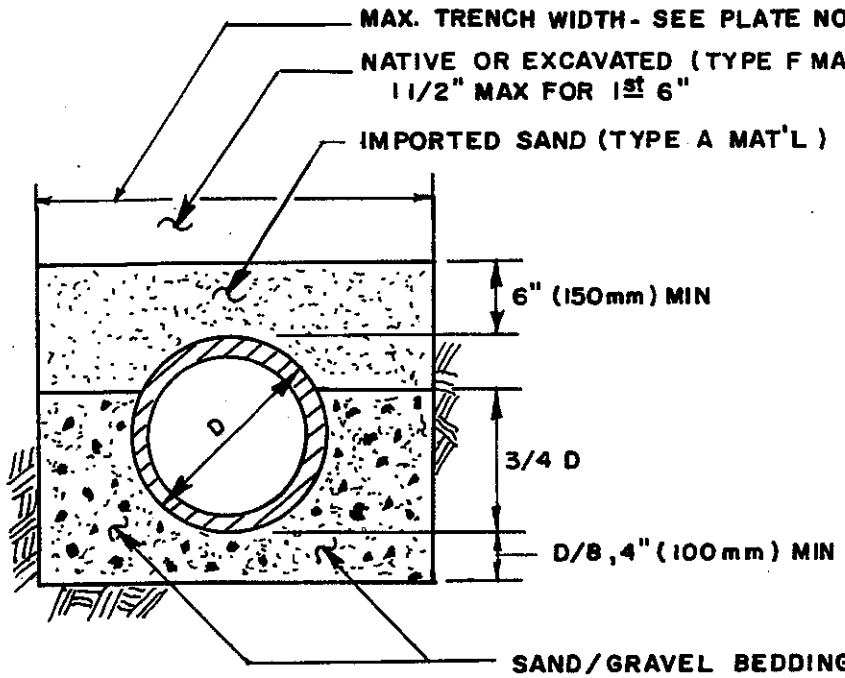

LF=1.5
OR
LF=1.7
(DEPTH OF COVER SEE PLATE 11)

GENERAL NOTES:

1) Material specifications are in Section 3.6 of Standards.
2) Hand shape bedding for pipe curvature.
3) Load factors shown are primarily for this purpose of identifying the proper detail.

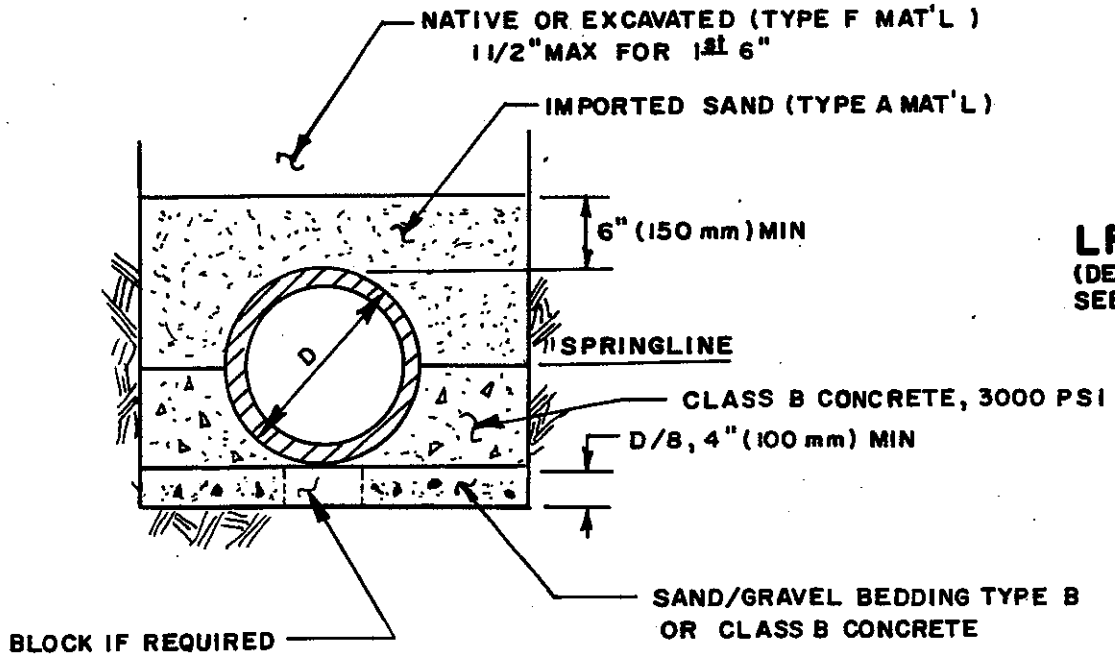

LF=1.9
(DEPTH OF COVER SEE PLATE 11)

CITY OF THOUSAND OAKS - UTILITIES DEPARTMENT

SUBMITTED Richard Bardin APPROVED H.W. Blume ADOPTED BY THE CITY COUNCIL OF THE CITY OF THOUSAND OAKS 5/8/79	DRAWN BY: D.K.H. CHECKED BY: SCALE: NONE REVISED:	CONSTRUCTION STANDARDS **PIPE TRENCH FOR ABS COMPOSITE PIPE LF=1.5, LF=1.7, LF=1.9**

PLATE NO. 8

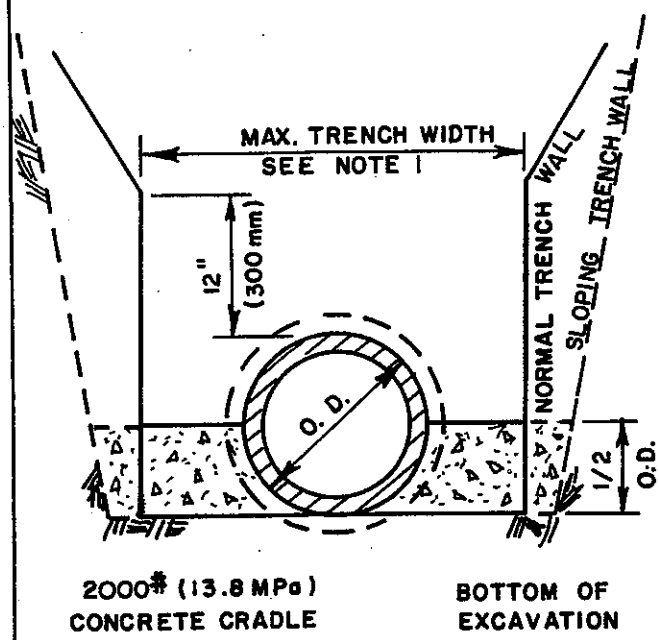

CRADLE FOR EXCESSIVE TRENCH BOTTOM WIDTH

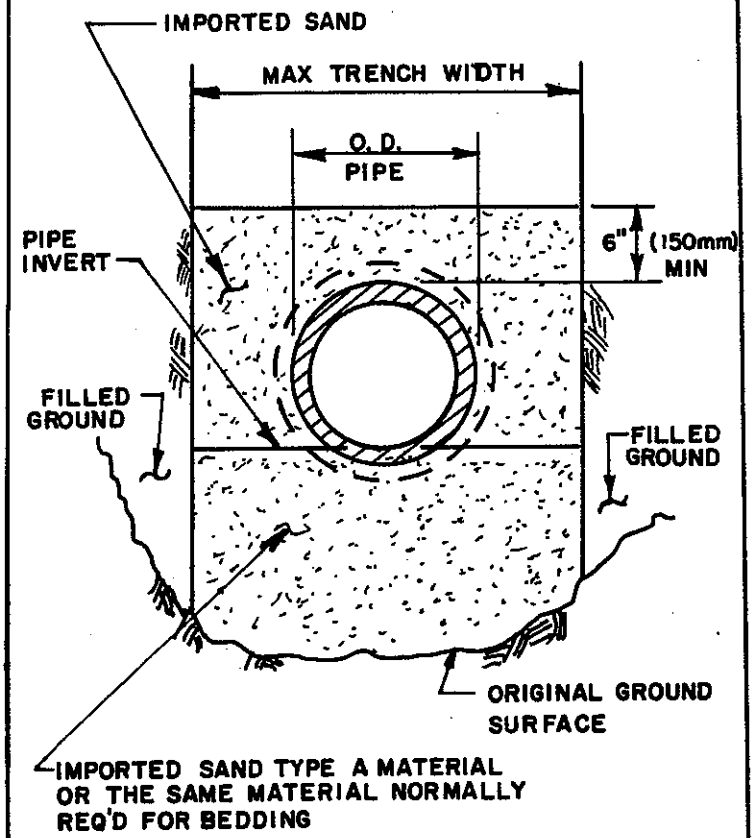

BEDDING FOR FILLED GROUND
(LESS THAN 90 % COMPACTION)

NOTES:

1) Excessive trench bottom width is defined as exceeding 36" (0.9 m) within the pipe zone for pipes 12" in diameter and smaller, and unless special approval is otherwise given.

2) A flexible coupling or pipe joint is required within 12" (300 mm) of each end of cradle.

3) Filled ground must be compacted to at least 4 feet above pipe invert before the pipe trench is excavated.

4) Balance of backfill per City Standard - Public Works Department.

CITY OF THOUSAND OAKS - UTILITIES DEPARTMENT

SUBMITTED Richard Bardin	DRAWN BY: D. K. H.	CONSTRUCTION STANDARDS
APPROVED [signature]	CHECKED BY:	OTHER PIPE TRENCH DETAILS
ADOPTED BY THE CITY COUNCIL OF THE CITY OF THOUSAND OAKS 5/8/79	SCALE: NONE	
	REVISED:	

PLATE NO. 9

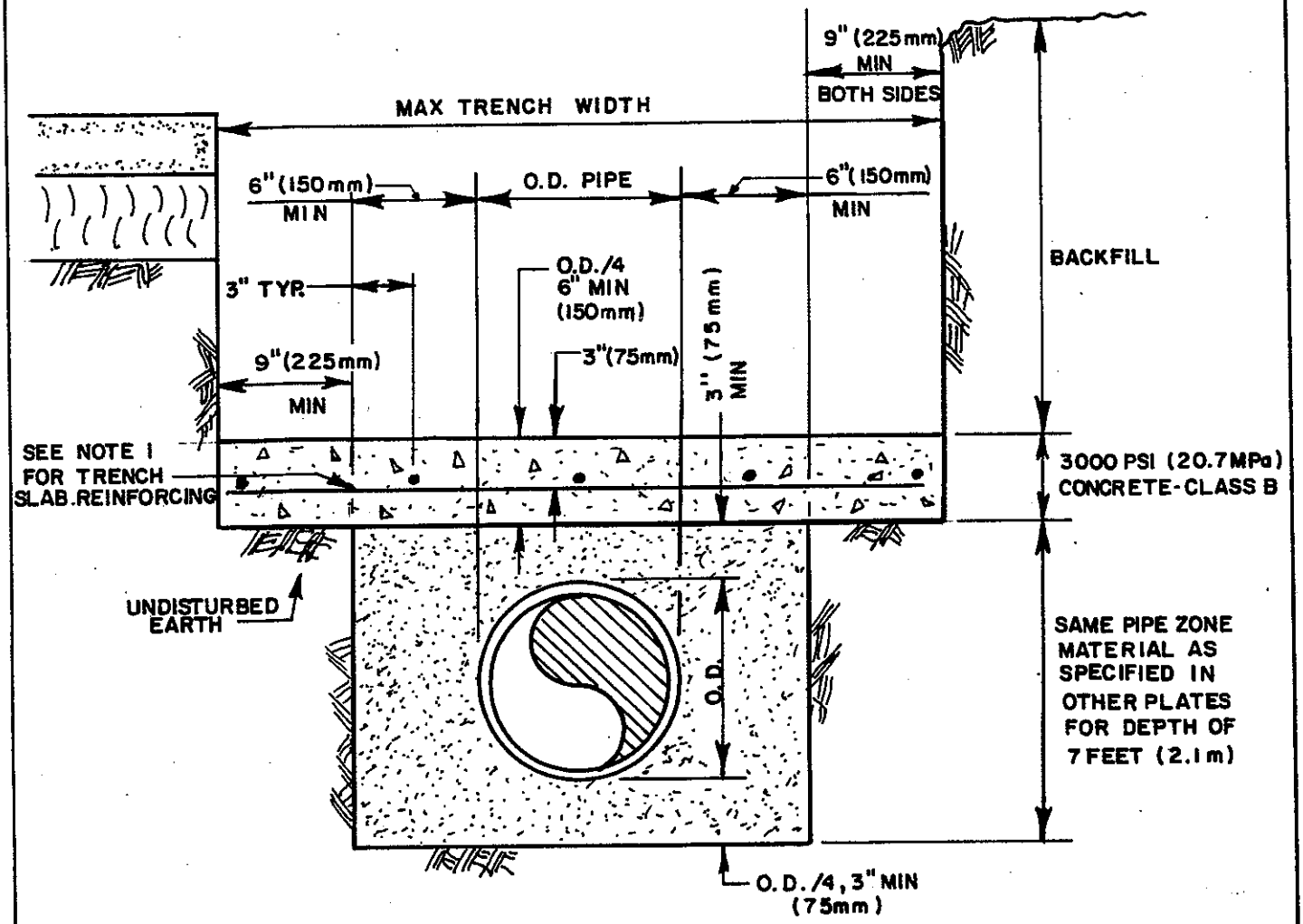

NOTES:

1) Longitudinal trench slab reinforcing 5-#4 bars placed as shown. Transverse trench slab reinforcing, 1-#4 bars every 24" (600 mm) of slab length.

2) Concrete to be vibrated.

3) The minimum distance between top of slab and bottom of subgrade (if paved) or finished surface (if not paved) shall be 6" (150 mm) and 12" (300 mm) respectively.

4) This detail may be used for shallow trenches if approved.

CITY OF THOUSAND OAKS - UTILITIES DEPARTMENT

SUBMITTED Richard Bardin

APPROVED [signature]

ADOPTED BY THE CITY COUNCIL OF THE CITY OF THOUSAND OAKS 5/8/79

DRAWN BY: D.K.H.

CHECKED BY:

SCALE: NONE

REVISED:

CONSTRUCTION STANDARDS

REINFORCED CONCRETE TRENCH SLAB

PLATE NO. 10

DEPTHS OF COVER FOR VARYING LOAD FACTORS

	TRENCH WIDTH 30" and under			TRENCH WIDTH 30"-36"			
LOAD FACTOR / PIPE DIAMETER	1.5	1.9	2.8	1.5	1.9	2.8	3.4
6"	5-15 ft	15-21 ft	21-30 ft	5-15 ft	15-21 ft	21-30 ft	---
8"	5-13 ft	13-23 ft	23-30 ft	5-13 ft	13-17 ft	17-27 ft	27-30 ft
10"	5-16 ft	16-24 ft	24-30 ft	5-11 ft	11-15 ft	15-25 ft	25-30 ft
12"	5-19 ft	19-30 ft	---	5-15 ft	15-24 ft	24-30 ft	---
15"	---	---	---	5-12 ft	12-21 ft	21-30 ft	---
18"	---	---	---	5-17 ft	17-26 ft	26-30 ft	---

NOTES:

(1) See plates 4 and 5 for corresponding pipe details.

(2) Standard depth of cover in paved areas is 7 feet ; depths less than 7 feet may require special details as determined by the Utilities Department unless they are within non-traveled areas where 5 feet is allowed. Depths exceeding the values shown require special approval.

(3) The above table is based upon a safety factor of 1.5.

(4) Trench widths exceeding the values shown require special approval.

CITY OF THOUSAND OAKS - UTILITIES DEPARTMENT

SUBMITTED Richard Bardin

APPROVED

ADOPTED BY THE CITY COUNCIL OF THE CITY OF THOUSAND OAKS 5/8/79

DRAWN BY: R.L.

CHECKED BY:

SCALE: NONE

REVISED:

CONSTRUCTION STANDARDS

LOAD FACTORS-VC PIPE

LOAD FACTOR / PIPE DIAMETER	PVC			ABS COMPOSITE		
	1.5	1.7	1.9	1.5	1.7	1.9
6"	5-9 ft	9-14 ft	14-22 ft	5-11 ft	11-15 ft	15-22 ft
8"	5-8.5 ft	8.5-14 ft	14-22 ft	5-11 ft	11-15 ft	15-22 ft
10"	5-8 ft	8-14 ft	14-20 ft	5-10 ft	10-15 ft	15-20 ft
12"	5-8 ft	8-12.5 ft	12.5-18 ft	5-9 ft	9-14 ft	14-18 ft
15"	5-7 ft	7-11 ft	11-15 ft	----	----	----

NOTES:

(1) Load factors shown are primarily for the purpose of identifying the proper detail (see Plates 6 and 7 for pipe trench details).

(2) Standard depth of cover in paved areas is 7 feet; depths less than 7 feet may require special details as determined by the Utilities Department unless they are within non-traveled areas where 5 feet is allowed. Depths exceeding the values shown require special approval.

(3) The above table is only applicable for trench widths under 30" for pipes up to 10" in diameter and under 40" for 12" and 15" pipes. Wider trenches require special approval.

CITY OF THOUSAND OAKS - UTILITIES DEPARTMENT

SUBMITTED Richard Bardin

APPROVED [signature]

ADOPTED BY THE CITY COUNCIL OF THE CITY OF THOUSAND OAKS 5/8/79

DRAWN BY: B.C.

CHECKED BY:

SCALE: NONE

REVISED:

CONSTRUCTION STANDARDS

LOAD FACTORS PVC AND ABS COMPOSITE PIPE

PLATE NO. 12

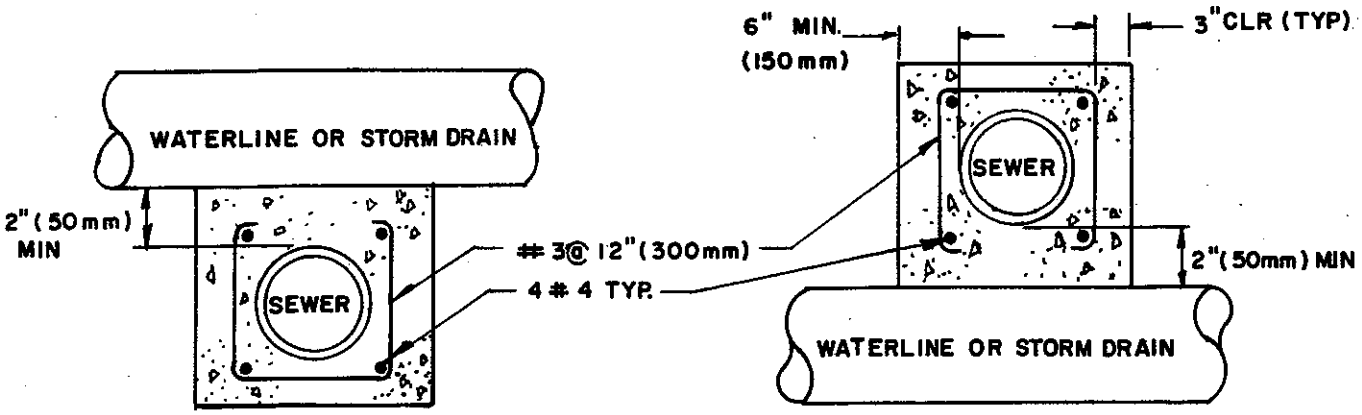

UNDER OBSTRUCTION **OVER OBSTRUCTION**

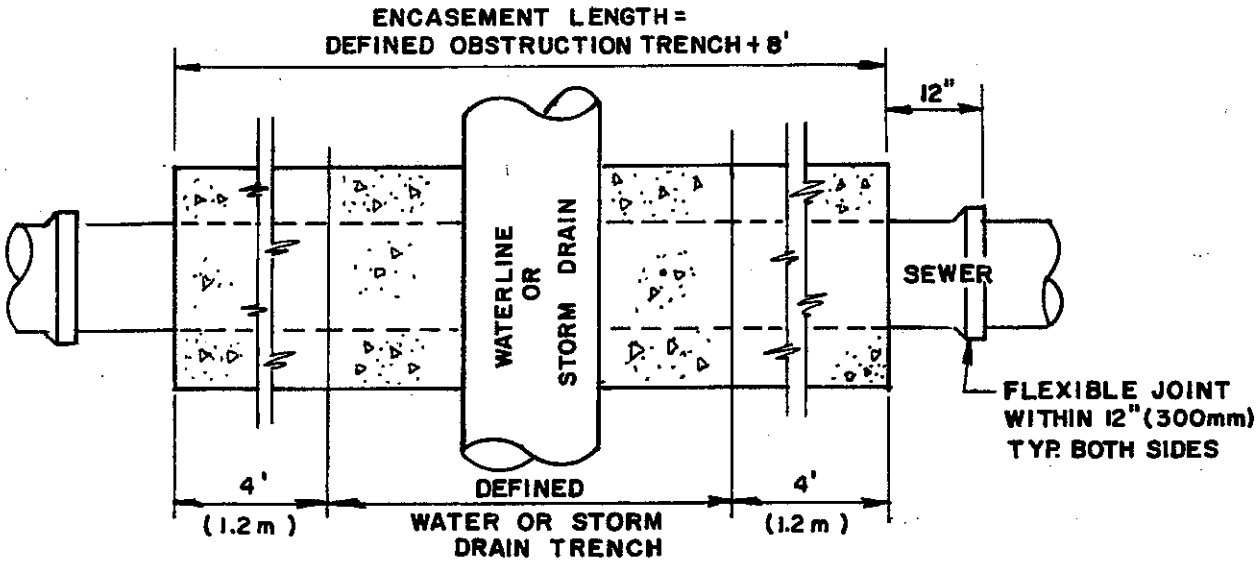

GENERAL NOTES:

1) This construction applies where clearance between outside of pipes or pipe/obstruction equals 6" (150 mm or less).

2) Concrete to be class A - see Section 3 / 2" clear on all rebar.

3) Waterline or stormdrain details shown also pertain to other obstructions.

CITY OF THOUSAND OAKS - UTILITIES DEPARTMENT

SUBMITTED Richard Bardin

APPROVED

ADOPTED BY THE CITY COUNCIL OF THE CITY OF THOUSAND OAKS 5/8/79

DRAWN BY: R.L.

CHECKED BY:

SCALE: NONE

REVISED:

CONSTRUCTION STANDARDS

SPECIAL SUPPORT FOR WASTEWATER LINE OVER, UNDER OBSTRUCTION

PLATE NO. 13

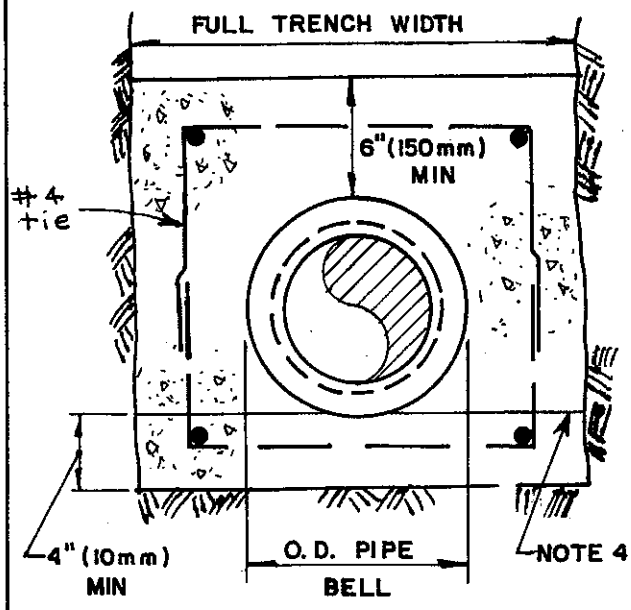

Notes:

1) All rebars #4; Ties @ 24"
2) All rebars use 3" clear
3) Wrap pipe with 15#/100 SF Roofing paper or as approved (not required for plastic pipe)
4) Optional construction joint.
5) Each joint to be tied down to prevent floating.
6) Concrete to be vibrated.

TYPE A ENCASEMENT

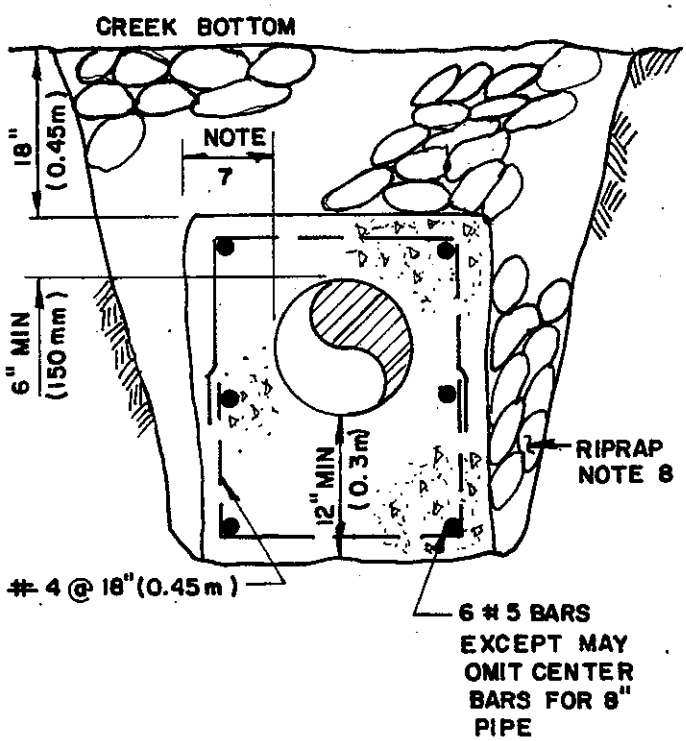

Notes:

7) 6" Min. typ. both sides.
8) 6" min. riprap chocked with sand as required.
9) Depth of concrete shall be to firm foundation.
10) Other details as shown for Type A.

TYPE B - FOR DRAINAGE COURSE

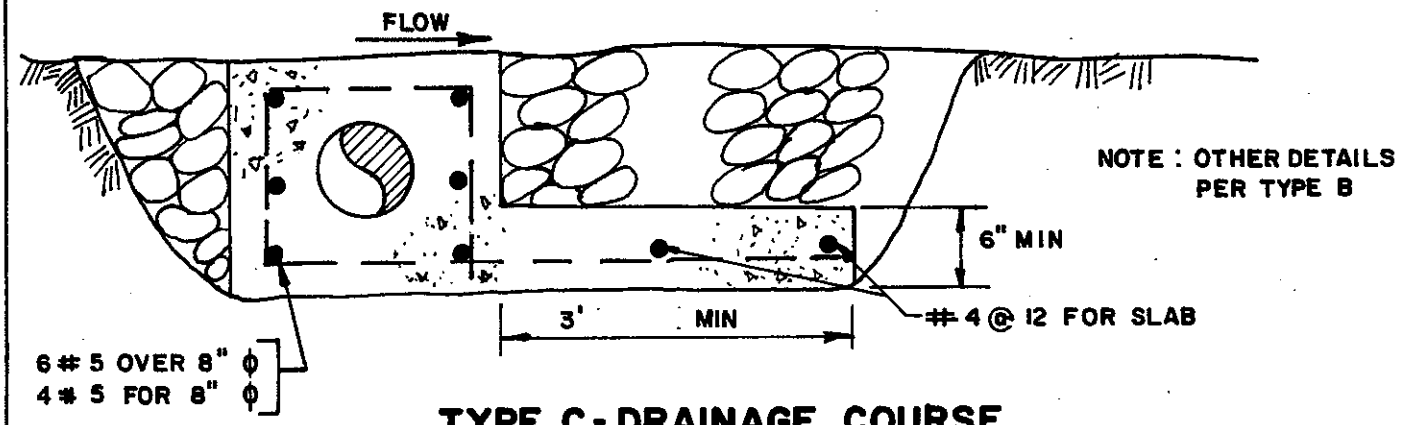

TYPE C - DRAINAGE COURSE

CITY OF THOUSAND OAKS - UTILITIES DEPARTMENT

SUBMITTED Richard Bardin

APPROVED

ADOPTED BY THE CITY COUNCIL OF THE CITY OF THOUSAND OAKS 5/8/79

DRAWN BY: R.L.

CHECKED BY:

SCALE: NONE

REVISED: 9/80

CONSTRUCTION STANDARDS

PIPE ENCASEMENTS

PLATE NO. 14

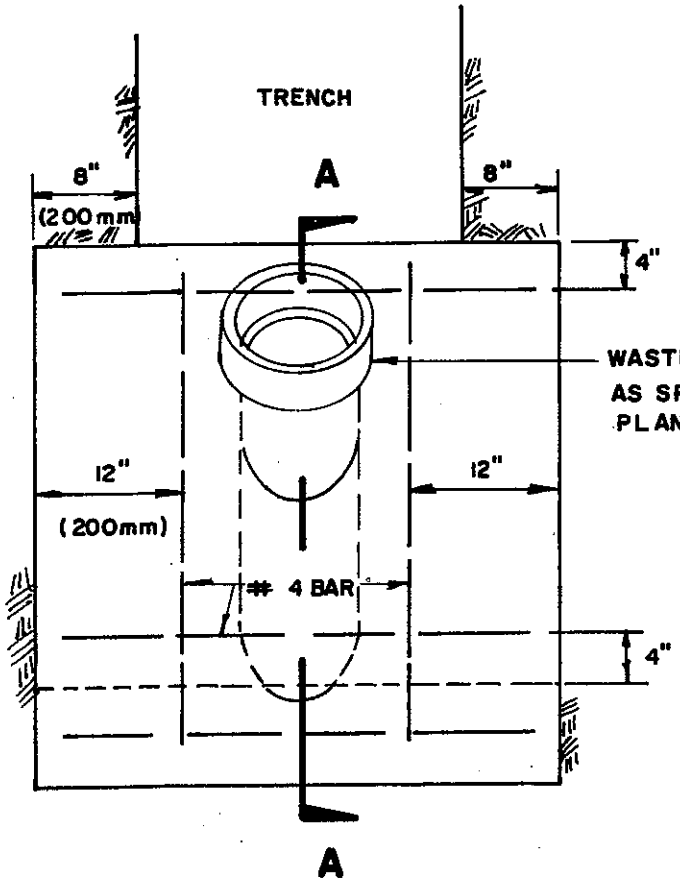

ELEVATION

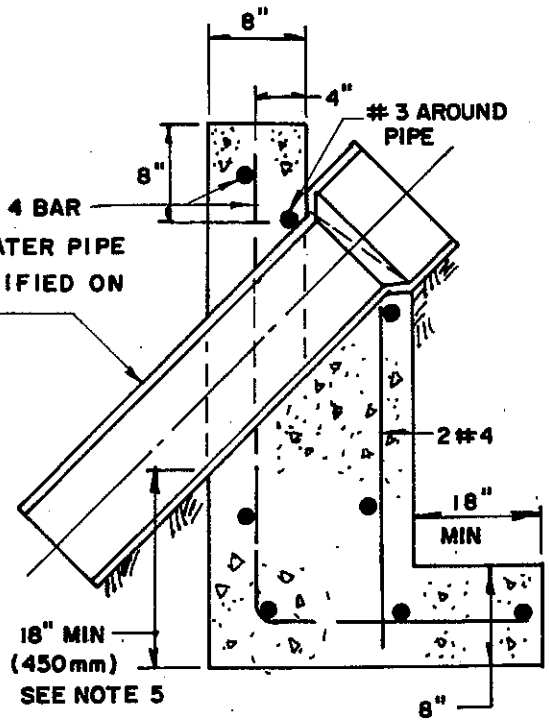

SECTION A-A

Notes:

1) This detail shall be used where calculations show additional resistance to sliding is required, and where specifically approved. It shall not be used for slopes less than 45° (1 horiz. to 1 vert.) or for plastic pipes.

2) Where required place anchor block every 50 feet (maximum).

3) This detail applies to 4" through 12" pipe sizes. Larger size pipes require special design.

4) Concrete to be Class A (see Section 3).

5) Depth of concrete 18" min. or as required to reach solid foundation.

CITY OF THOUSAND OAKS - UTILITIES DEPARTMENT

SUBMITTED Richard Bardin APPROVED ADOPTED BY THE CITY COUNCIL OF THE CITY OF THOUSAND OAKS 5/8/79	DRAWN BY: R.L. CHECKED BY: SCALE: NONE REVISED:	CONSTRUCTION STANDARDS ANCHOR BLOCK

PLATE NO. 15

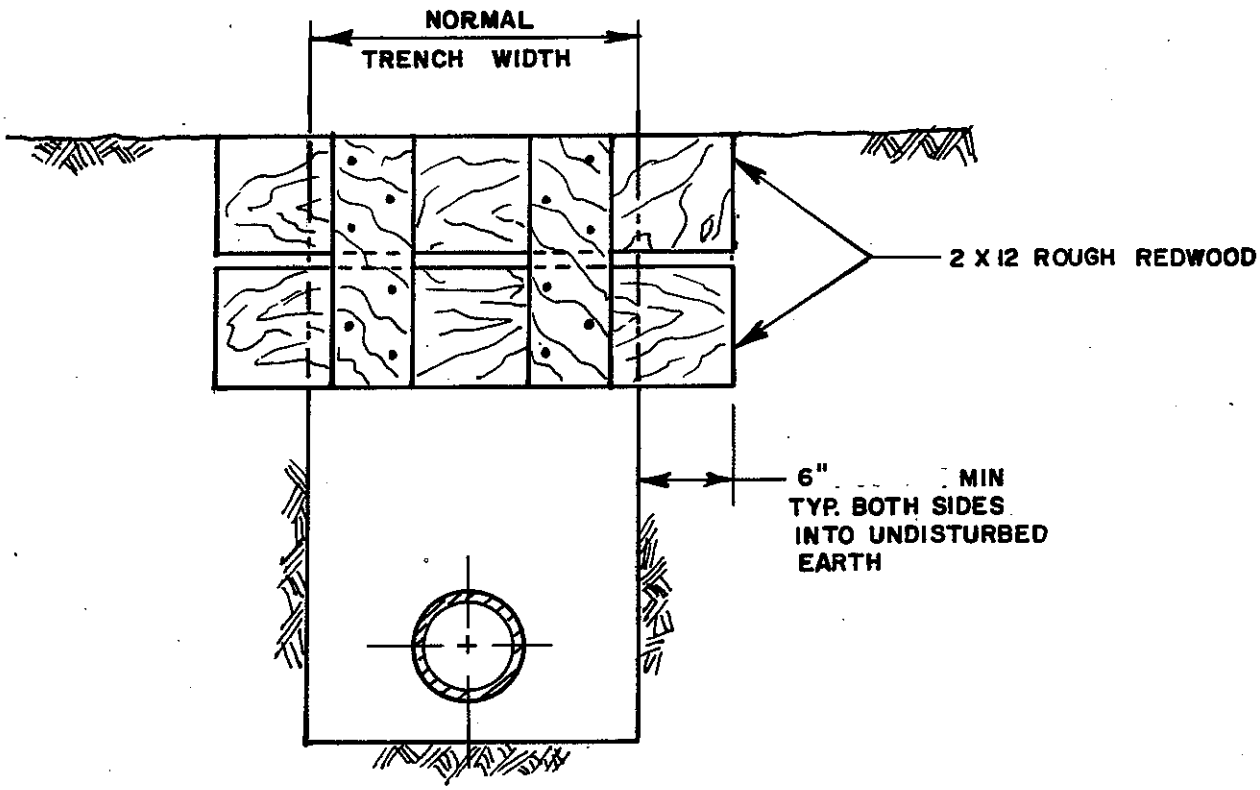

SECTION VIEW

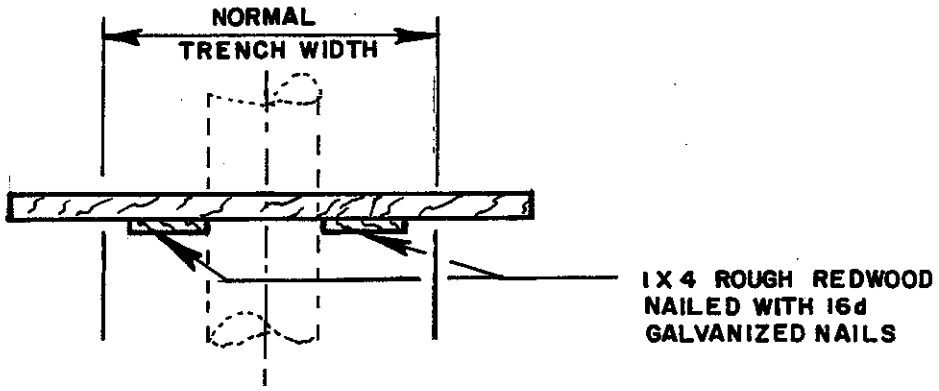

PLAN VIEW

NOTES:

1) This detail shall be used where finished ground slope exceeds 30 percent (1.7 horizontal to 1 vertical) or as required by Utilities Department.

2) Check dam to be spaced at 20 feet maximum, or at least two per any one slope equally spaced whichever yields the greater number.

CITY OF THOUSAND OAKS - UTILITIES DEPARTMENT

SUBMITTED Richard Bardin APPROVED ADOPTED BY THE CITY COUNCIL OF THE CITY OF THOUSAND OAKS 5/8/79	DRAWN BY: D.K.H. CHECKED BY: SCALE: NONE REVISED:	CONSTRUCTION STANDARDS REDWOOD CHECK DAM FOR STEEP SLOPES

PLATE NO. 16

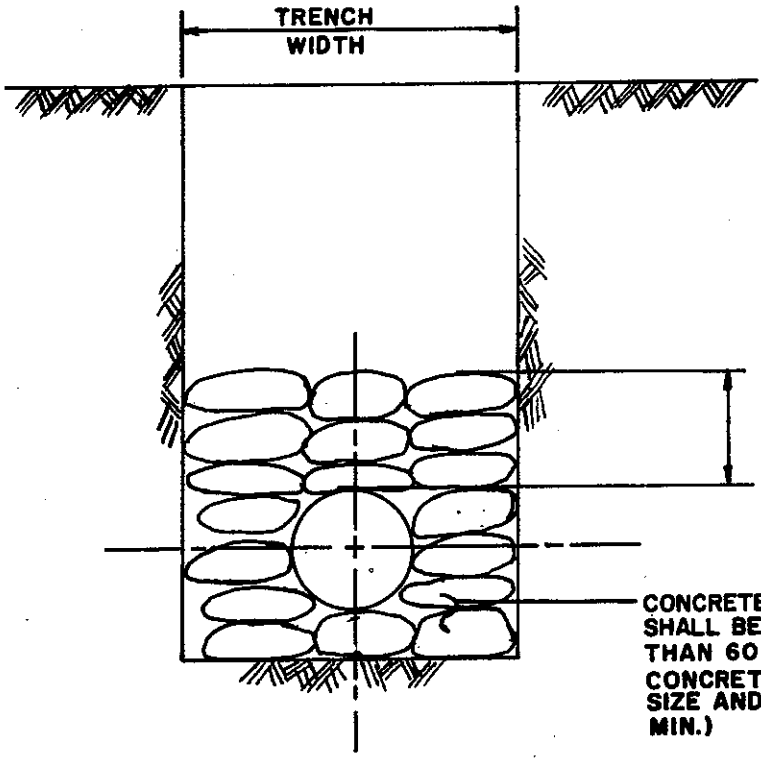

NOTES:

(1) This detail shall be used where finished slope exceeds 35 percent (1.43) horizontal to 1 vertical) or as required by Utilities Department. Its usage does not alter the requirement for the redwood check dam where applicable.

(2) Concrete filled sandbags are to be tightly packed around and under pipe in one row which is nearly vertical. Spacing to be at 20 feet (6.0m) maximum or at least two per slope equally spaced whichever yields the greater number.

CITY OF THOUSAND OAKS - UTILITIES DEPARTMENT

SUBMITTED Richard Bardin

APPROVED [signature]

ADOPTED BY THE CITY COUNCIL OF THE CITY OF THOUSAND OAKS 5/8/79

DRAWN BY: B.C.

CHECKED BY:

SCALE: NONE

REVISED: 9/80

CONSTRUCTION STANDARDS

CONCRETE FILLED SAND BAG TRENCH DETAIL FOR STEEP SLOPES

PLATE NO. 17

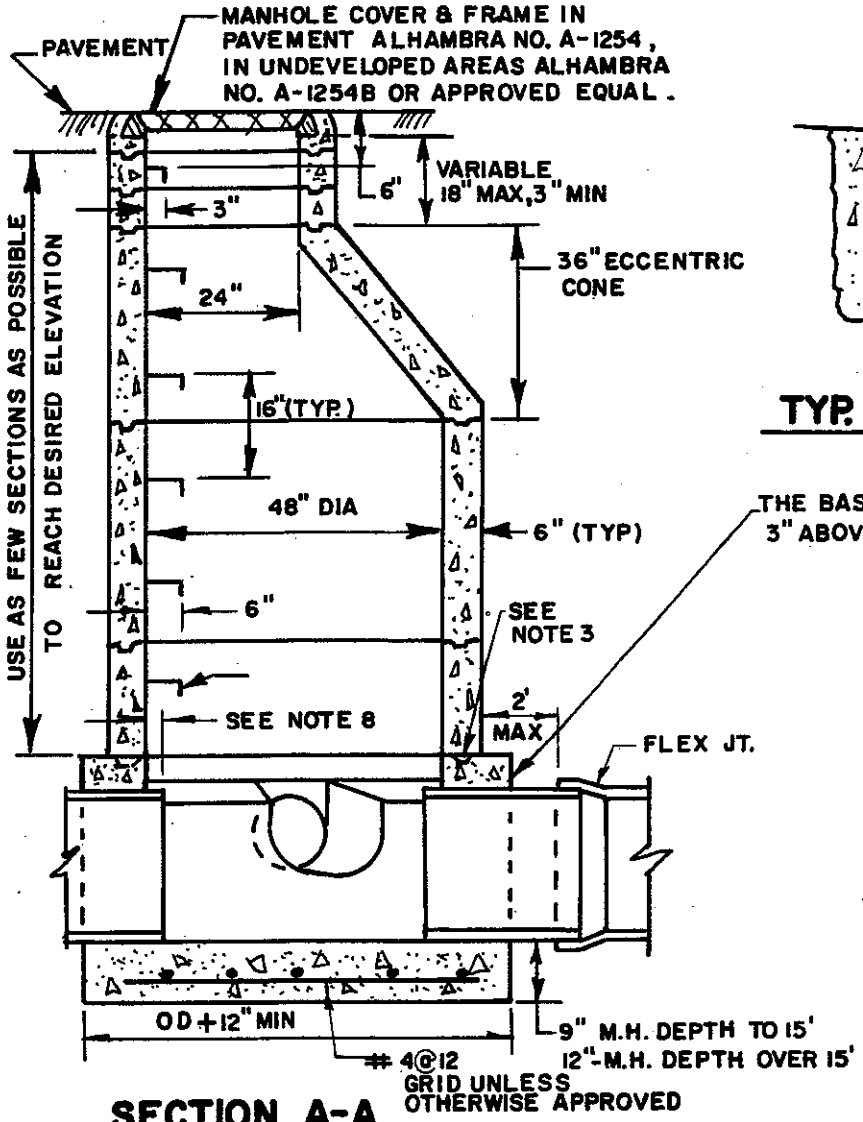

SECTION A-A

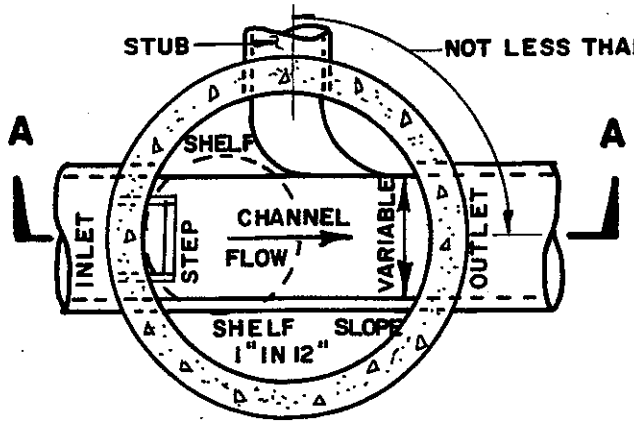

PLAN

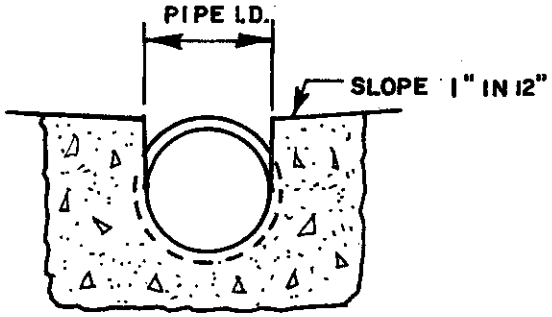

TYP. CHANNEL SECTION

Notes:

1) For manhole materials - see Section 3.9.
2) Manhole base to be Class B concrete cast in place. (3000#)
3) Bottom of first barrel section must be sealed per Section 3.9. If tongue & groove, use metal forming ring in concrete base.
4) For manholes less than 5' deep, see Plate 19.
5) Flexjoint shall be provided within 2' of manhole except for ABS composite pipe.
6) Where the pipe exceeds 18" in diameter, use 60" diameter manhole.
7) In undeveloped areas top of cone to be 12"-18" above surrounding ground. See Plate 21 for securing lid.
8) Pipe projection = 2" maximum inside manhole.

CITY OF THOUSAND OAKS - UTILITIES DEPARTMENT

SUBMITTED Richard Bardin APPROVED ADOPTED BY THE CITY COUNCIL OF THE CITY OF THOUSAND OAKS 5/8/79	DRAWN BY D.K.H. CHECKED BY: SCALE: NONE REVISED: 9/80	CONSTRUCTION STANDARDS STANDARD 4' DIA MANHOLE

PLATE NO. 18

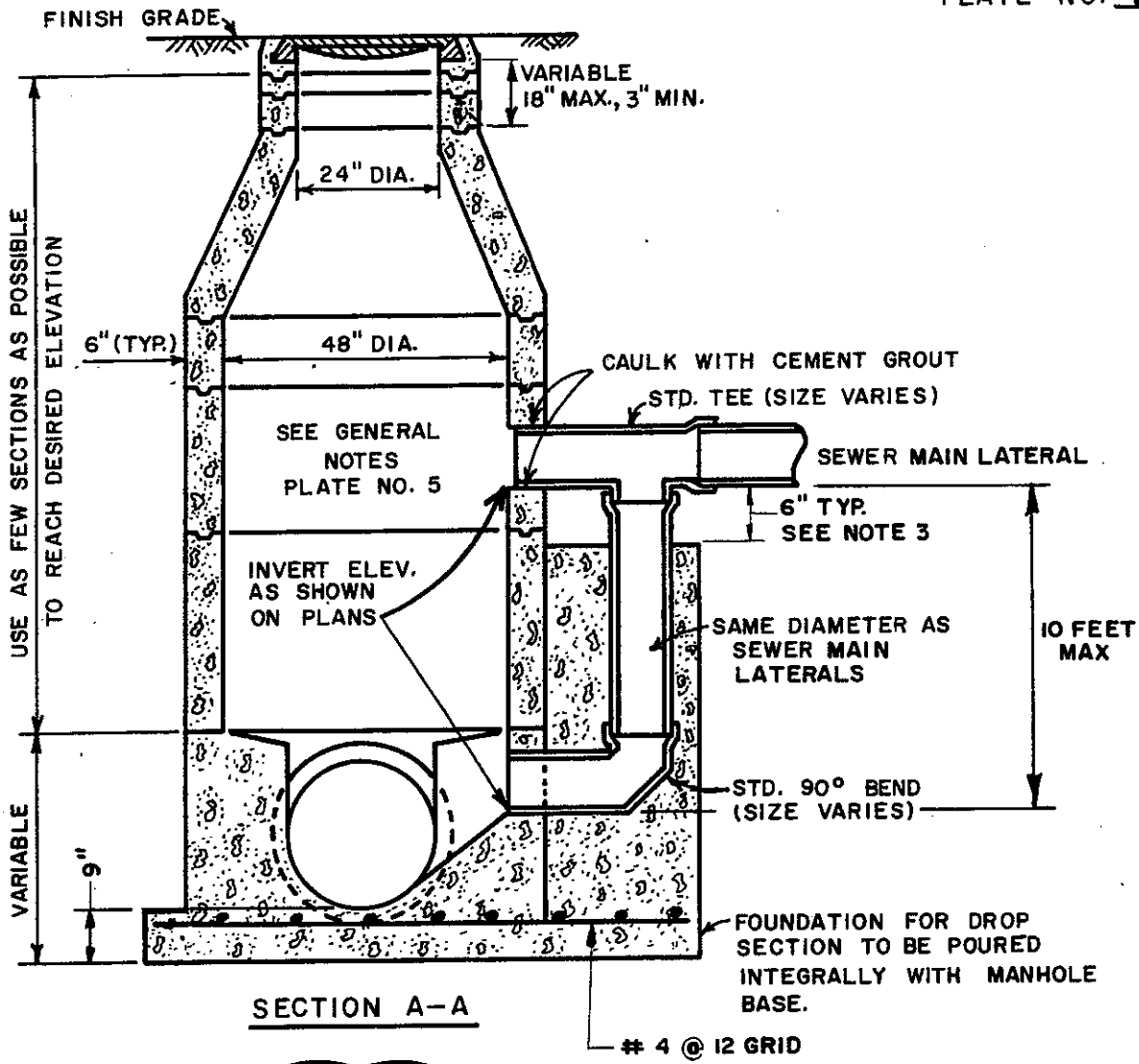

SECTION A-A

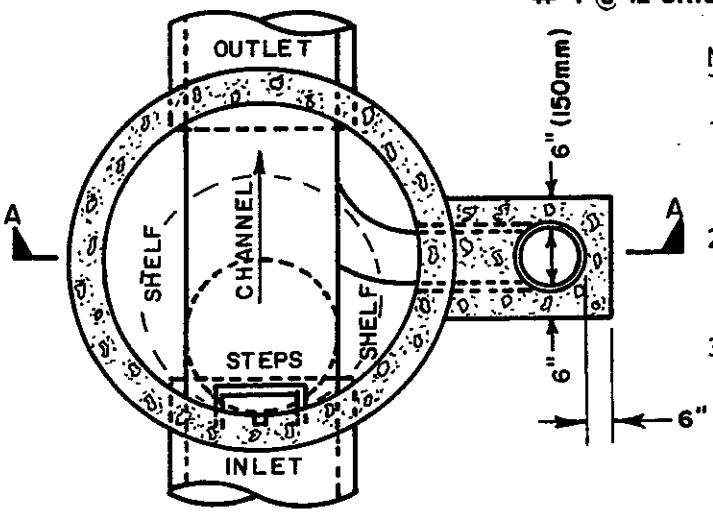

PLAN

NOTES:

1. See Plate 17 for applicable notes and designations
2. Plastic pipes require water stops
3. Special care is required in compaction between top of concrete and incoming pipe 90% min. rel. comp.

CITY OF THOUSAND OAKS — UTILITIES DEPARTMENT

SUBMITTED Richard Bardin

APPROVED

ADOPTED BY THE CITY COUNCIL OF THE CITY OF THOUSAND OAKS 5/8/79

DRAWN BY: D.K.H.

CHECKED BY:

SCALE: NONE

REVISED: 9/80

CONSTRUCTION STANDARDS

DROP MANHOLE

PLATE NO. 19

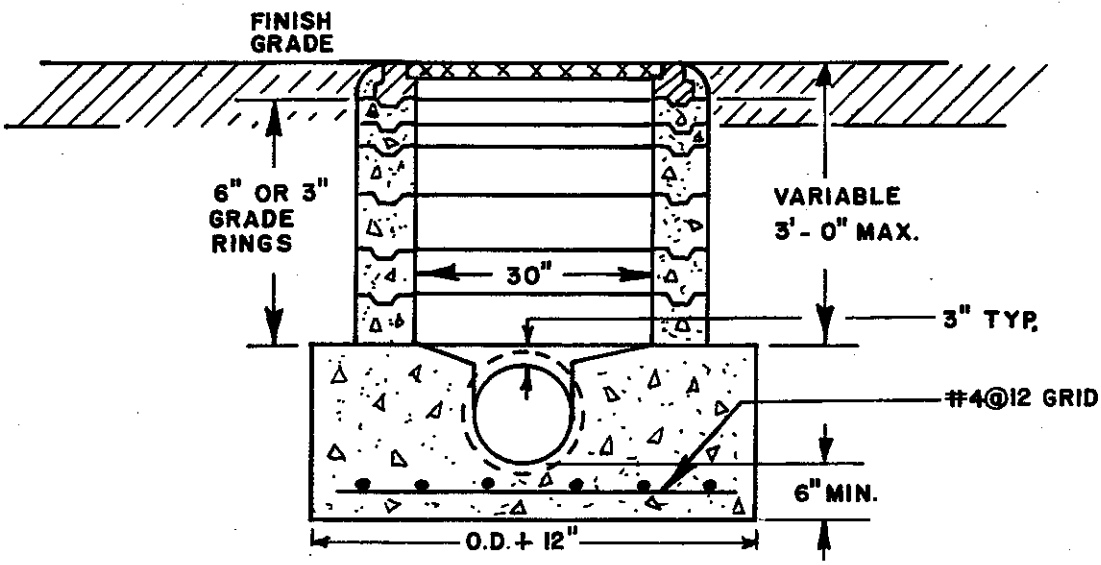

3.0 FOOT AND UNDER DEPTH TO TOP OF BASE

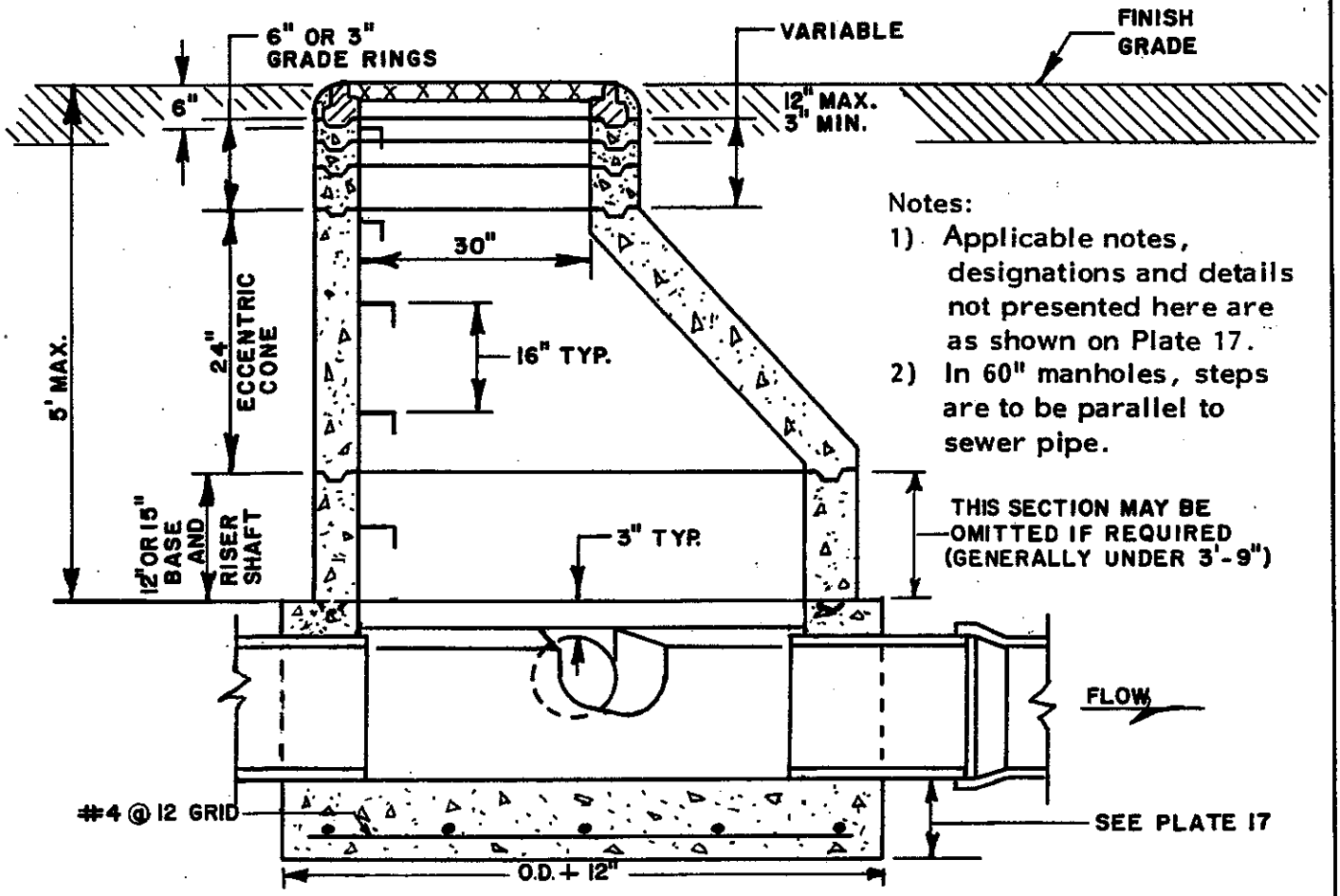

Notes:

1) Applicable notes, designations and details not presented here are as shown on Plate 17.
2) In 60" manholes, steps are to be parallel to sewer pipe.

3.0 FOOT TO 5.0 FOOT DEPTH TO TOP OF BASE

CITY OF THOUSAND OAKS - UTILITIES DEPARTMENT

SUBMITTED Richard Bardin

APPROVED

ADOPTED BY THE CITY COUNCIL OF THE CITY OF THOUSAND OAKS 5/8/79

DRAWN BY: D.K.H.
CHECKED BY:
SCALE: NONE
REVISED:

CONSTRUCTION STANDARDS

SHALLOW MANHOLES

PLATE NO. 20

Applicability of 5 ft. dia. manhole

Where wastewater line exceeds 18"
Where wastewater line is 18 ft. or deeper

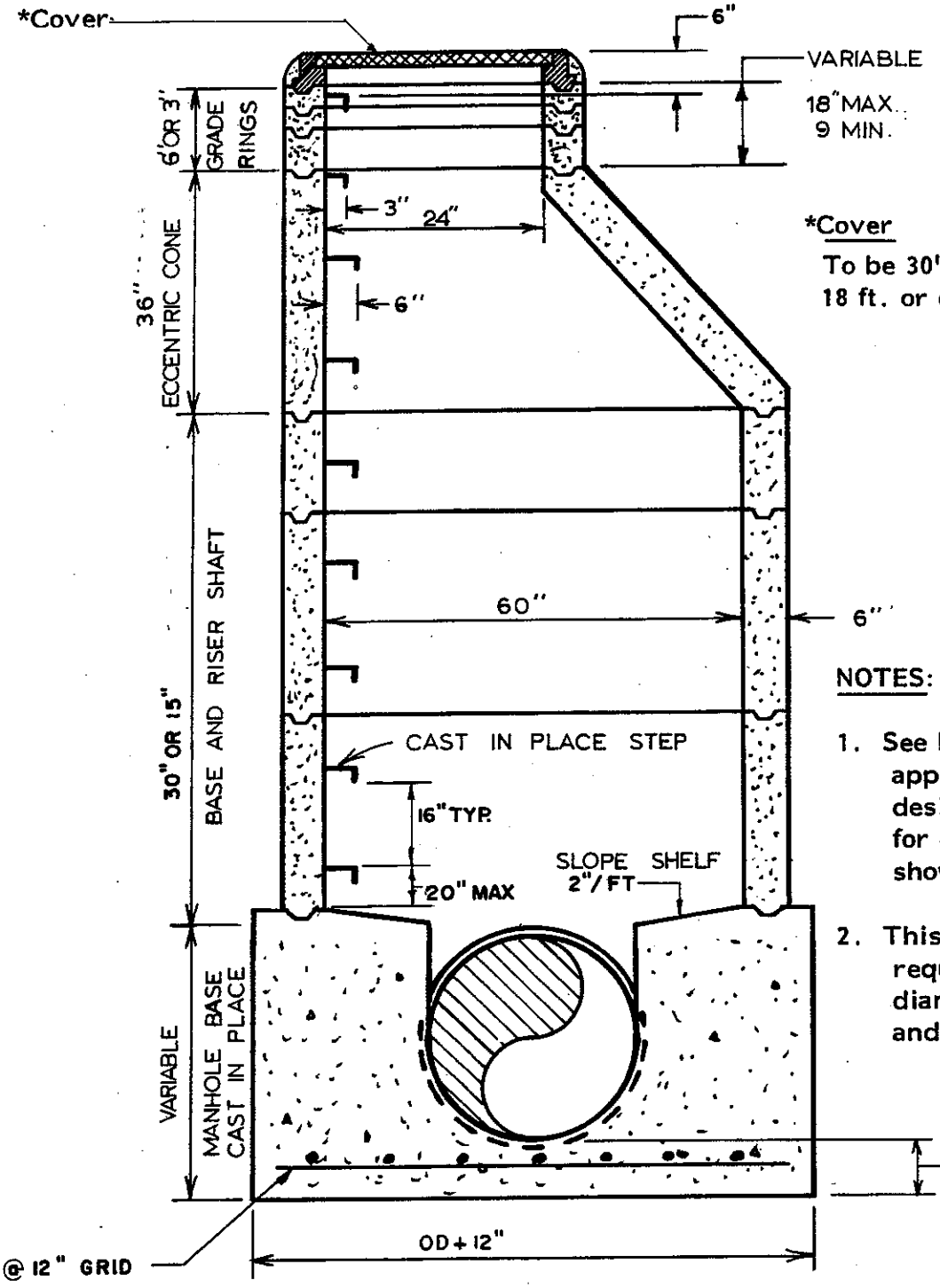

*Cover
To be 30" dia. if line is 18 ft. or deeper

NOTES:

1. See Plate 17 for applicable notes & designations and for details not shown here.
2. This manhole is required for 18" diameter and larger lines.

CITY OF THOUSAND OAKS - UTILITIES DEPARTMENT

SUBMITTED Richard Bardin	DRAWN BY: D. K. H.	CONSTRUCTION STANDARDS
APPROVED [signature]	CHECKED BY:	5' (1.5 M) DIAMETER MANHOLE
ADOPTED BY THE CITY COUNCIL OF THE CITY OF THOUSAND OAKS 5/8/79	SCALE: NONE	
	REVISED: 9/80	

PLATE NO. 21

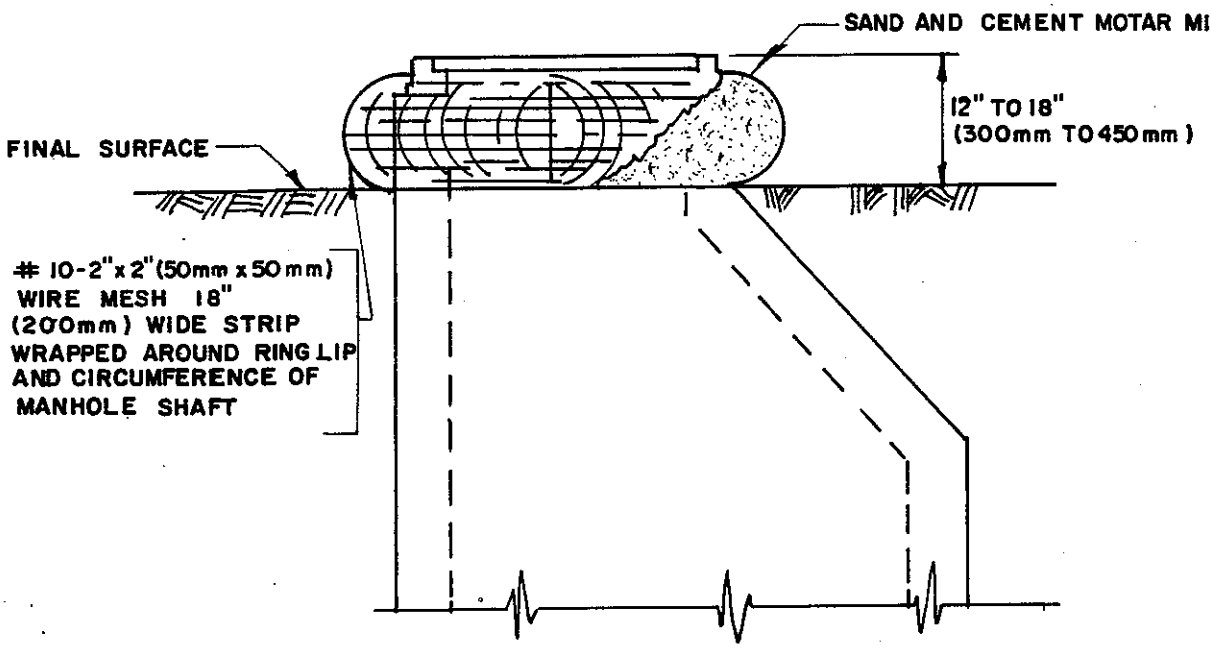

CASE I CONSTRUCTION WITH GRADE RINGS

Notes:

1) See Plate 17 for applicable notes and designations.

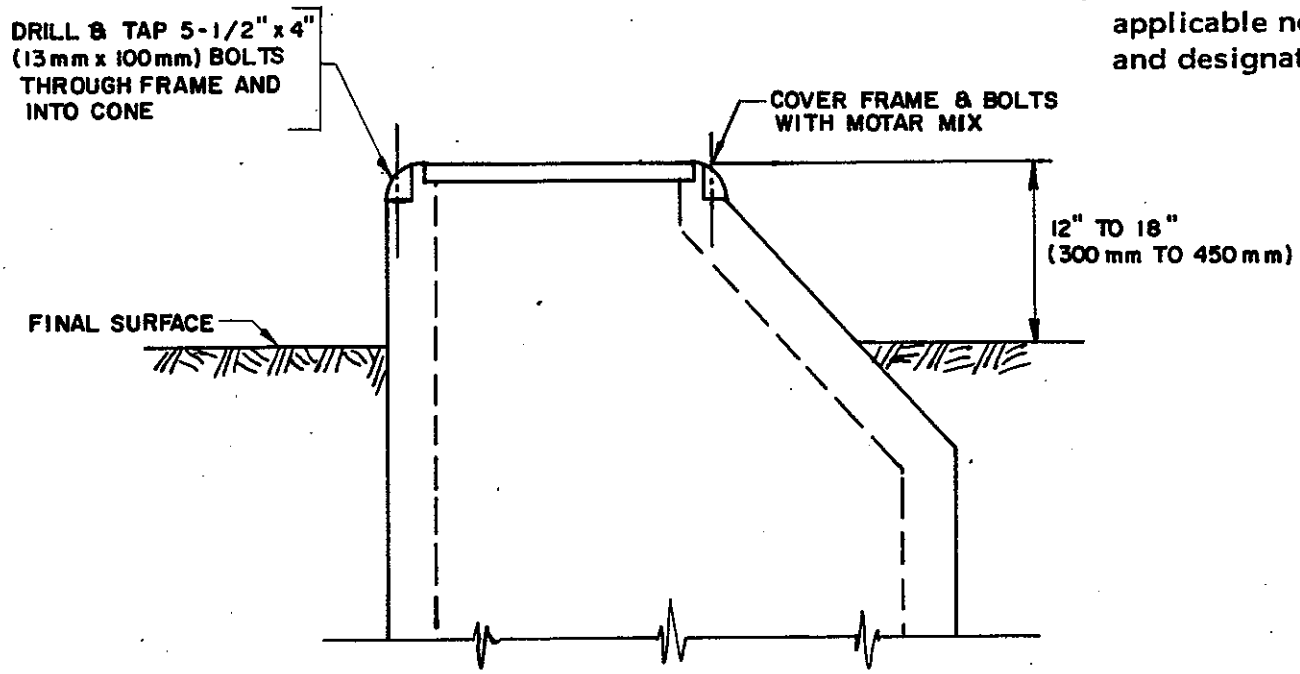

CASE II CONSTRUCTION WITHOUT GRADE RINGS

CITY OF THOUSAND OAKS - UTILITIES DEPARTMENT

SUBMITTED Richard Bardin

APPROVED

ADOPTED BY THE CITY COUNCIL OF THE CITY OF THOUSAND OAKS 5/8/79

DRAWN BY: R.L.

CHECKED BY:

SCALE: NONE

REVISED:

CONSTRUCTION STANDARDS

MANHOLE SECURING DETAILS UNDEVELOPED AREAS

PLATE NO. 22

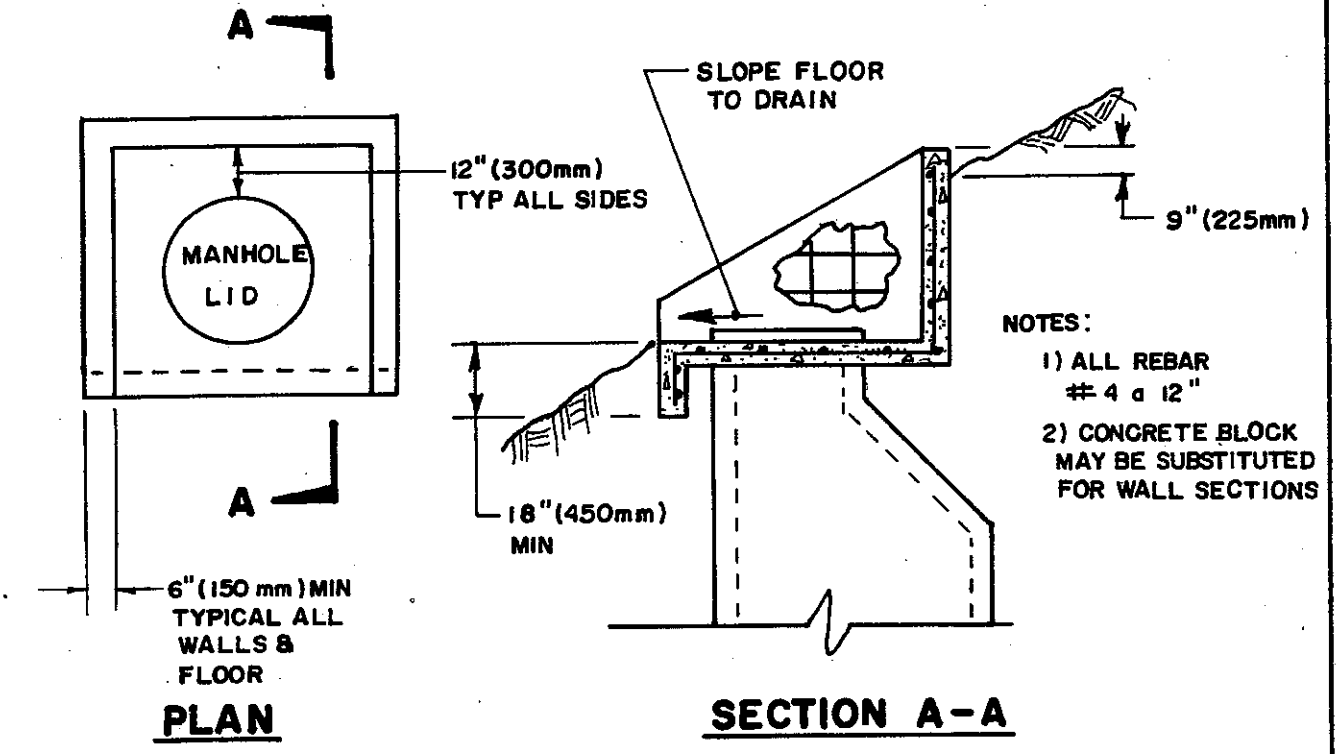

CONCRETE (OR BLOCK) RETAINING WALL

(TO BE USED WHERE GROUND SLOPE EXCEEDS 30% OR AS REQUIRED)

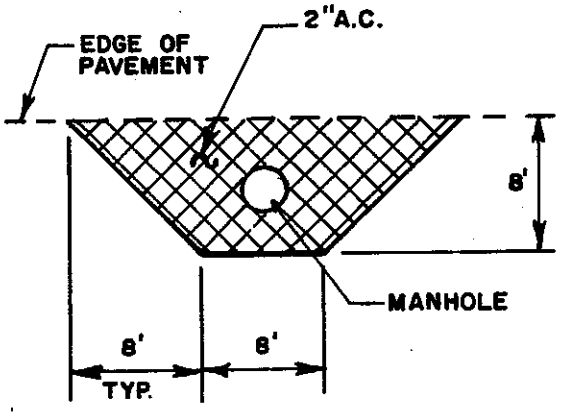

MANHOLE IN STREET SHOULDER

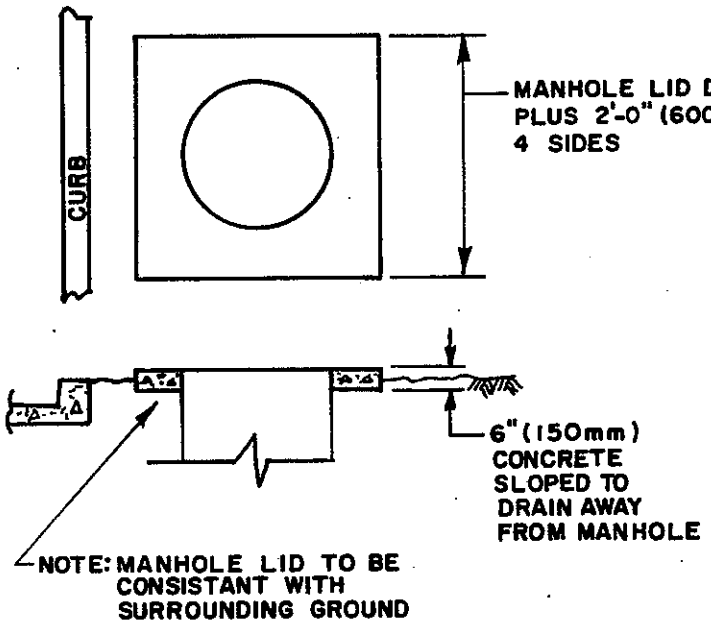

MANHOLE IN PARKWAY

CITY OF THOUSAND OAKS - UTILITIES DEPARTMENT

SUBMITTED Richard Bardin

APPROVED

ADOPTED BY THE CITY COUNCIL OF THE CITY OF THOUSAND OAKS 5/8/79

DRAWN BY: D.K.H.

CHECKED BY:

SCALE: NONE

REVISED:

CONSTRUCTION STANDARDS

MISCELLANEOUS MANHOLE DETAILS

PLATE NO. 23

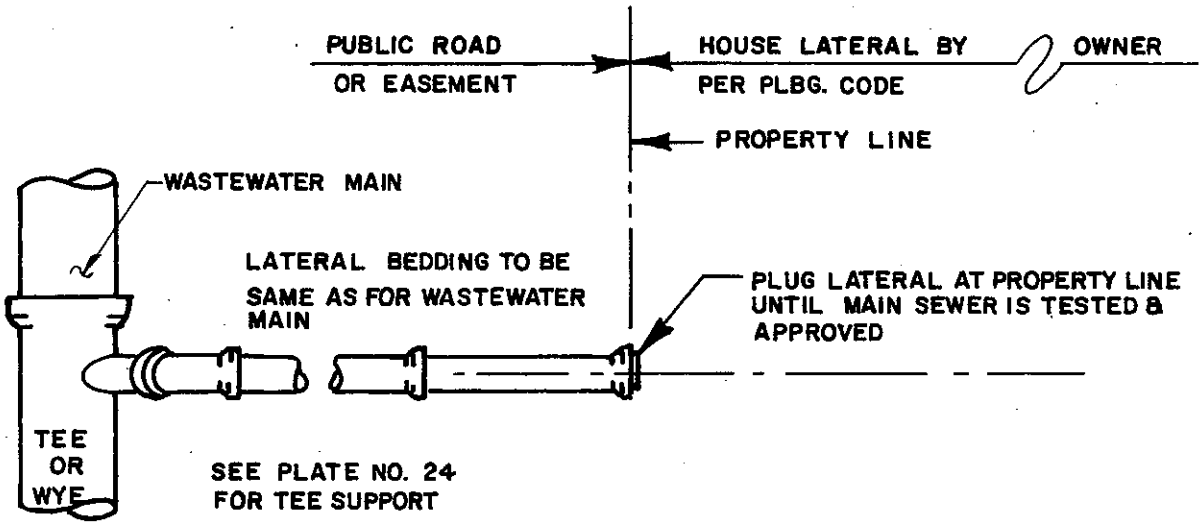

PLAN

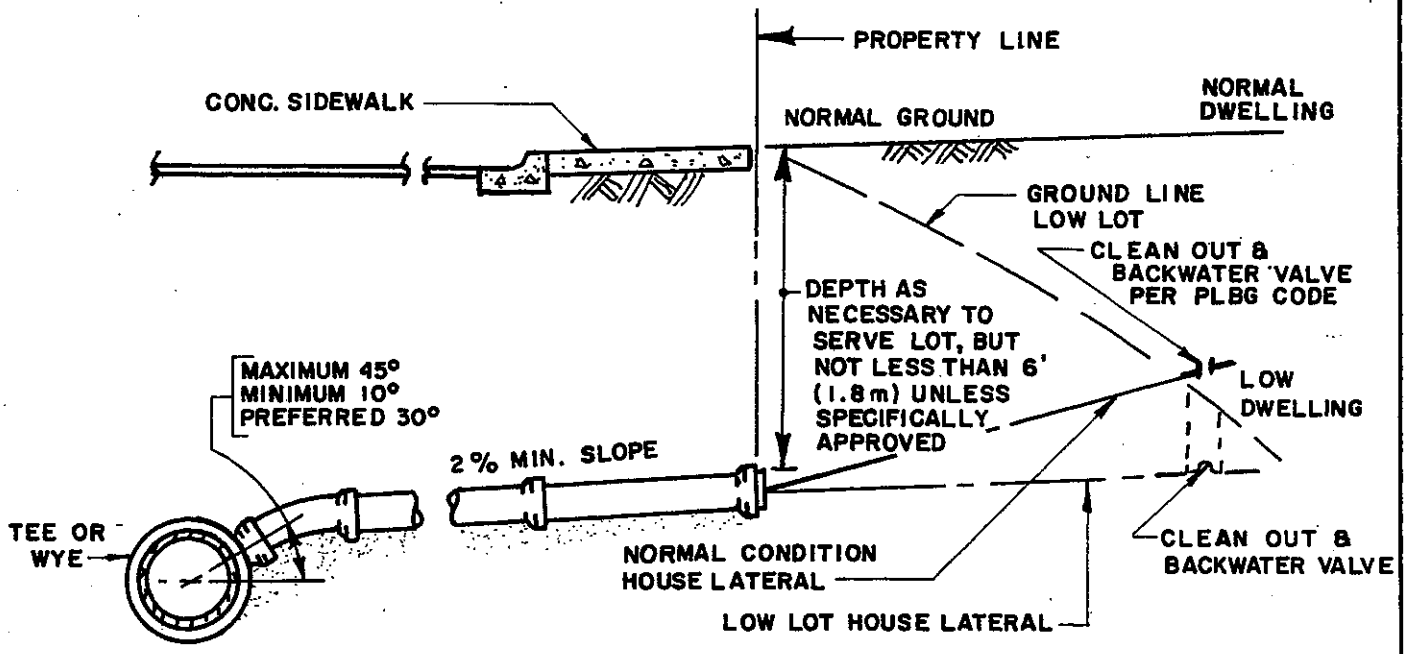

ELEVATION

NOTES:

1. To connect six inch (150mm) and smaller house laterals, install tee saddle in wastewater main with inspector's approval.
2. Locate lateral in accordance with water-wastewater separation ordinance - See Plate No. 30.
3. Service laterals larger than six inches (150mm) shall be connected with a manhole.
4. Location of all laterals shall be shown on as-built drawings.

CITY OF THOUSAND OAKS - UTILITIES DEPARTMENT

SUBMITTED Richard Bardin APPROVED ADOPTED BY THE CITY COUNCIL OF THE CITY OF THOUSAND OAKS 5/8/79	DRAWN BY: D.K.H. CHECKED BY: SCALE: NONE REVISED:	CONSTRUCTION STANDARDS SERVICE LATERAL

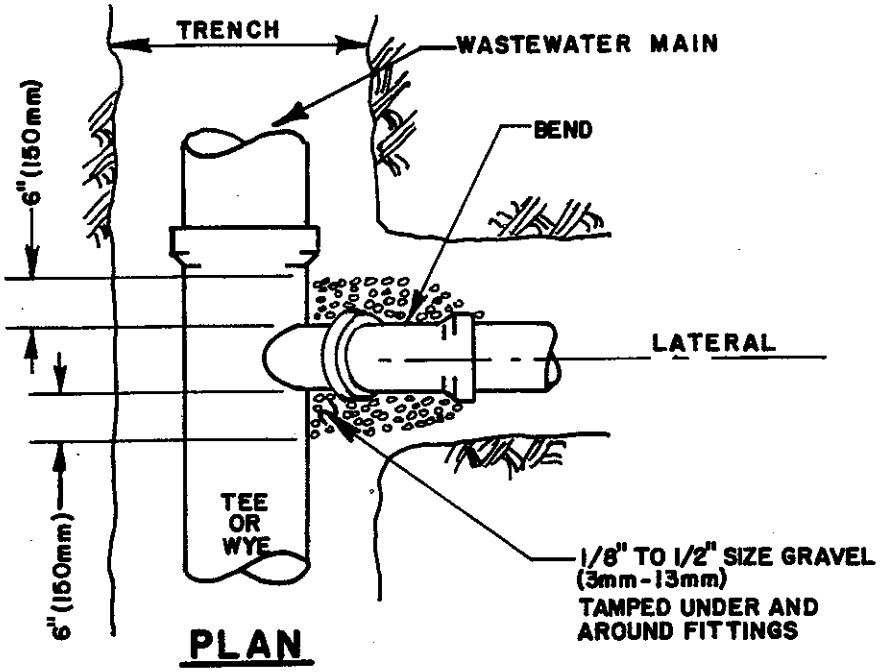

PLAN

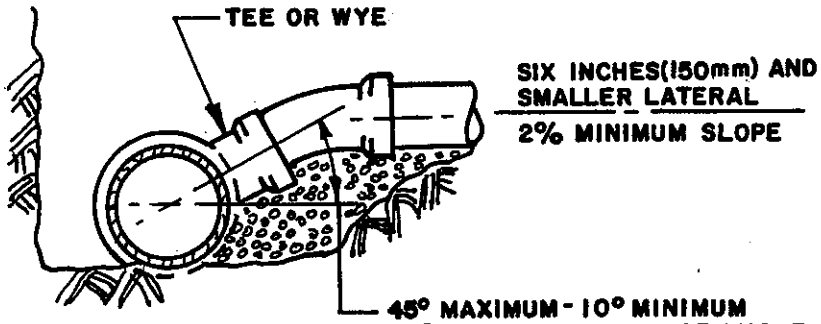

END VIEW

CITY OF THOUSAND OAKS - UTILITIES DEPARTMENT

SUBMITTED Richard Bardin

APPROVED Arthur B. Francis

ADOPTED BY THE CITY COUNCIL OF THE CITY OF THOUSAND OAKS 5/8/79

DRAWN BY: D.K.H.

CHECKED BY:

SCALE: NONE

REVISED:

CONSTRUCTION STANDARDS

TEE AND WYE SUPPORT

PLATE NO. 25

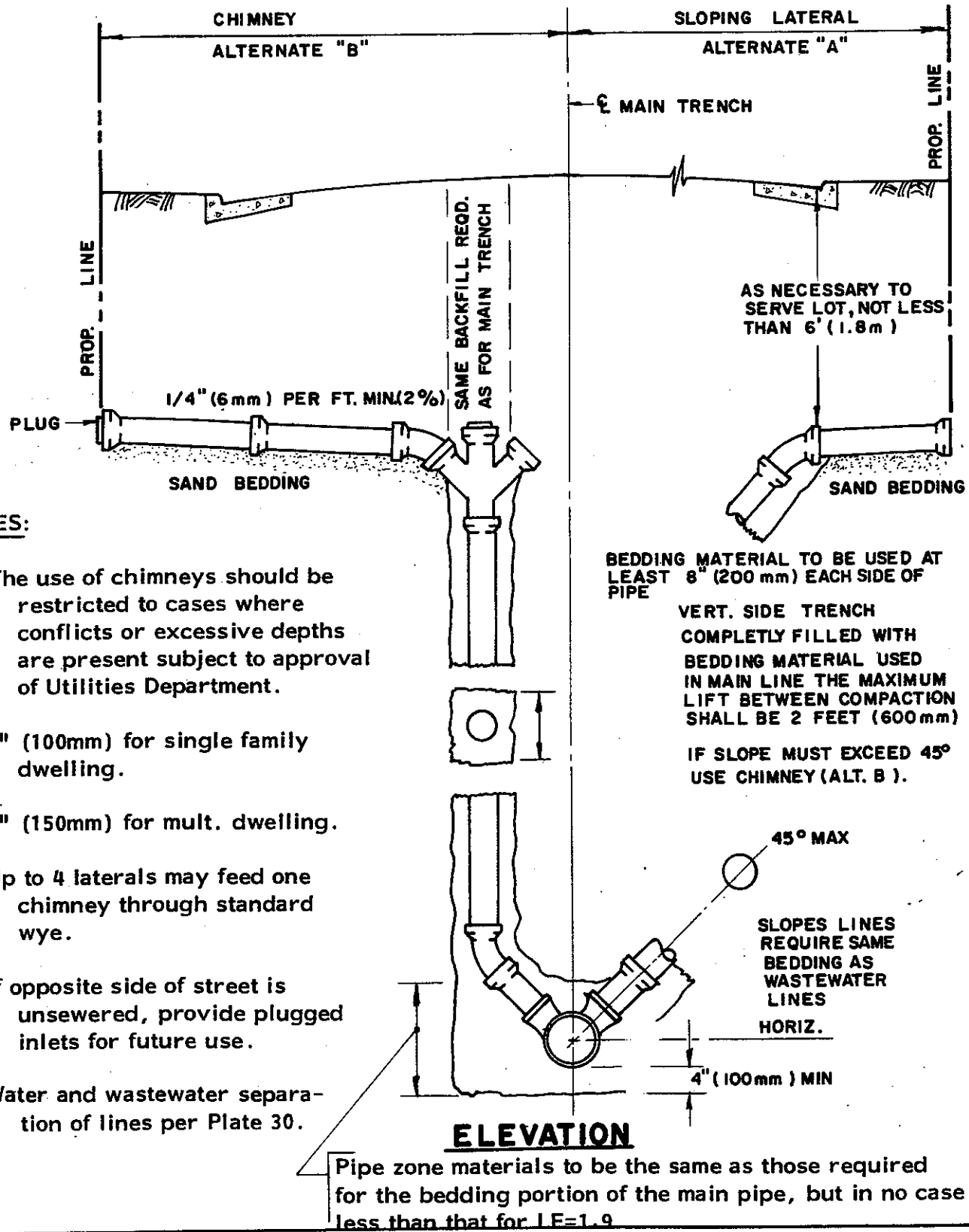

NOTES:

1. The use of chimneys should be restricted to cases where conflicts or excessive depths are present subject to approval of Utilities Department.
2. 4" (100mm) for single family dwelling.
3. 6" (150mm) for mult. dwelling.
4. Up to 4 laterals may feed one chimney through standard wye.
5. If opposite side of street is unsewered, provide plugged inlets for future use.
6. Water and wastewater separation of lines per Plate 30.

ELEVATION

Pipe zone materials to be the same as those required for the bedding portion of the main pipe, but in no case less than that for I.E=1.9

CITY OF THOUSAND OAKS - UTILITIES DEPARTMENT

SUBMITTED Richard Bardin

APPROVED [signature]

ADOPTED BY THE CITY COUNCIL OF THE CITY OF THOUSAND OAKS 5/8/79

DRAWN BY: R. L.
CHECKED BY:
SCALE: NONE
REVISED:

CONSTRUCTION STANDARDS

CHIMNEY

PLATE NO. 26

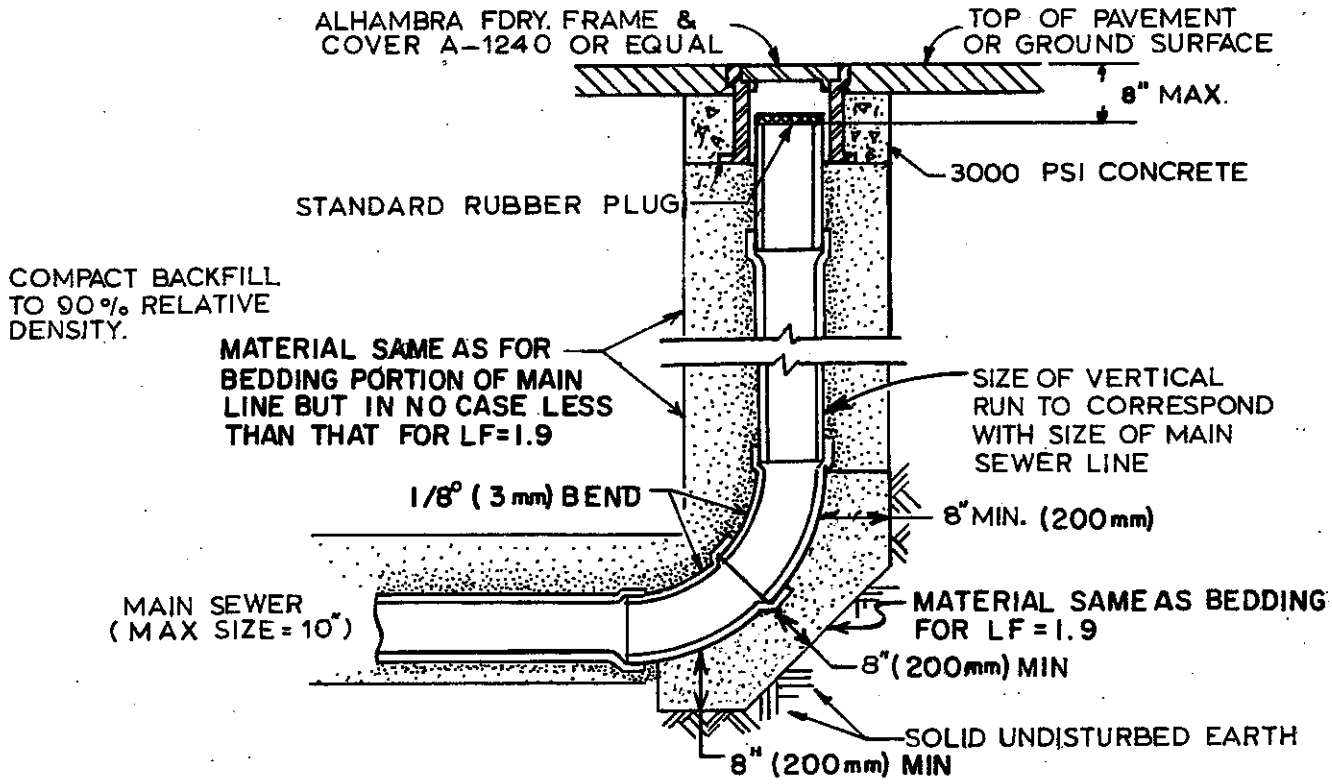

STANDARD "END OF MAIN" CLEANOUT

CITY OF THOUSAND OAKS - UTILITIES DEPARTMENT		
SUBMITTED Richard Bardin APPROVED ADOPTED BY THE CITY COUNCIL OF THE CITY OF THOUSAND OAKS 5/8/79	DRAWN BY: RL CHECKED BY: SCALE: NONE REVISED: 9/80	CONSTRUCTION STANDARDS **CLEANOUT**

PLATE NO. 27

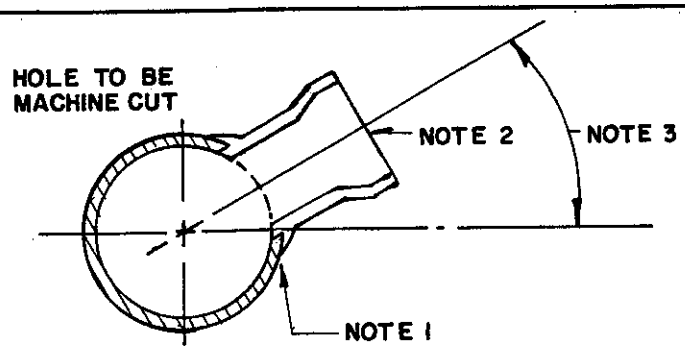

Notes:
1) Epoxy joint.
2) Collar tee saddle may have rubber coupling for "Bandseal" type.
3) 45° maximum
   10° minimum
   30° preferred for all connection (typ.)

VC CONNECTION TO AC OR VC

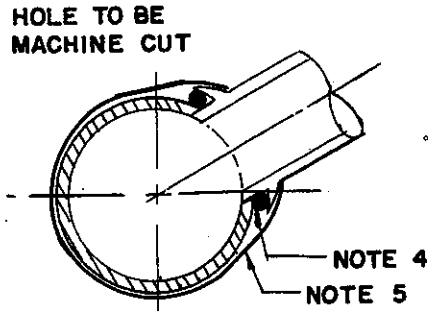

Notes:
4) Install rubber gasket as supplied by manufacturer.
5) Stainless steel clamps on both sides of lateral.

PVC CONNECTION TO PVC

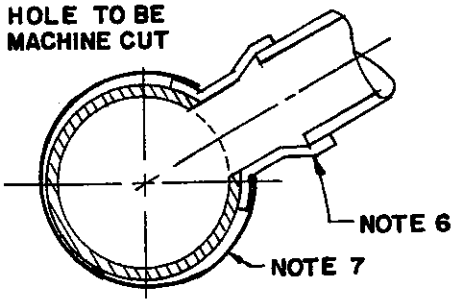

Notes:
6) Solvent cement welded saddle connection in accordance with manufacturer's recommendations.
7) Stainless steel clamps on both sides of lateral.

ABS (SOLID WALL) CONNECTION TO TO ABS COMPOSITE

General Notes:

8) All connections are only to be used when connecting to existing lines. New lines shall have wyes or tees.
9) Connections shall be made with pipe stubs contoured so that inside surface of mainline is not obstructed.
10) Maximum lateral size allowable with saddle connection = 6" (150 mm).

CITY OF THOUSAND OAKS - UTILITIES DEPARTMENT

SUBMITTED Richard Bardin	DRAWN BY: R.L.	CONSTRUCTION STANDARDS
APPROVED [signature]	CHECKED BY:	SADDLE CONNECTIONS TO MAIN LINE
ADOPTED BY THE CITY COUNCIL OF THE CITY OF THOUSAND OAKS 5/8/79	SCALE: NONE	
	REVISED:	

PLATE NO. 28

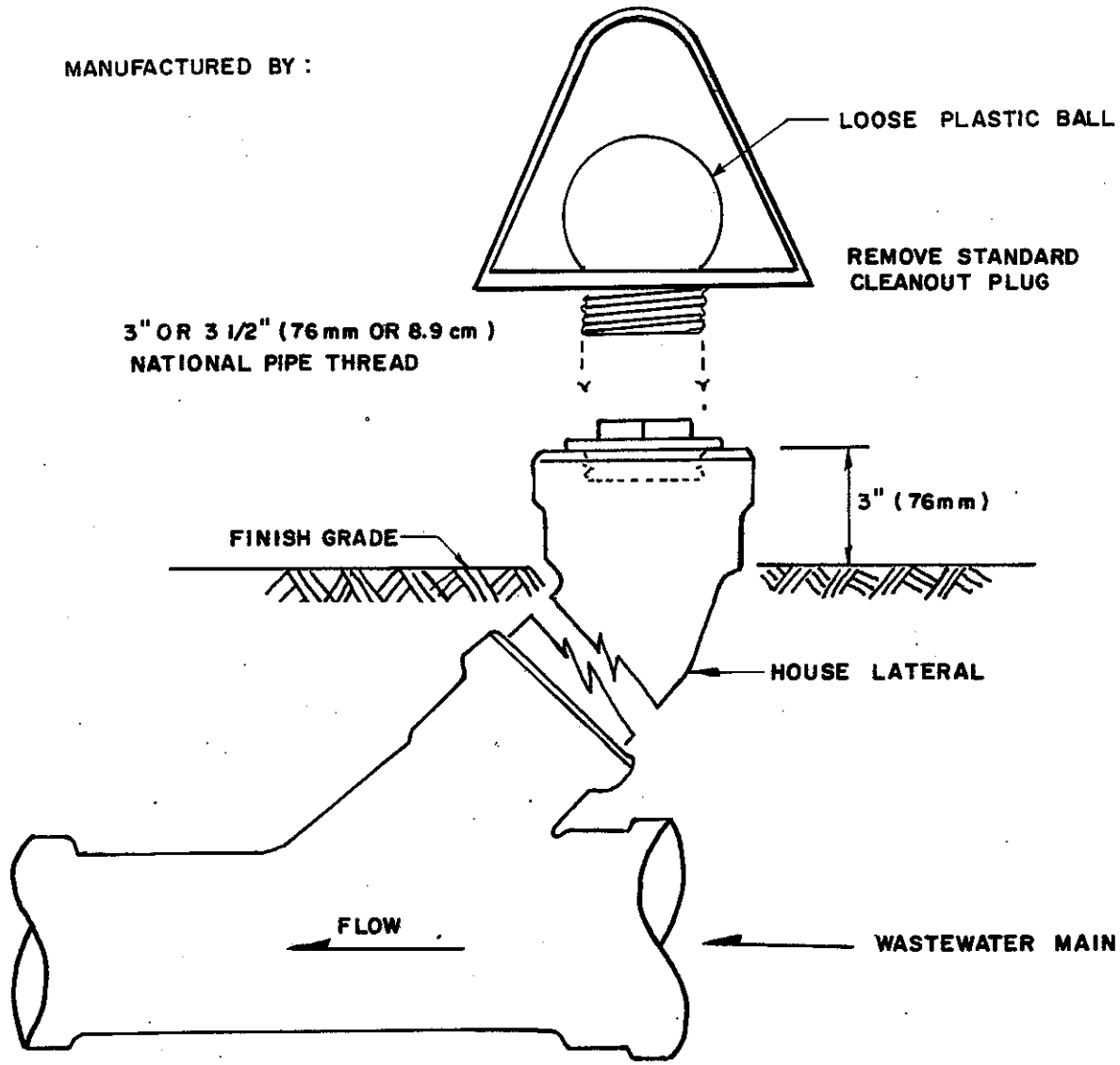

Notes:

1) Overflow system similar to the type detailed above is required when there is a possibility of reverse flow in service laterals serving low lots in hilly areas or in buildings with plumbing fixtures below the upstream sewer manhole rim. (i.e. Pad elevation below upstream manhole lid). When an existing lateral is being repaired or altered and the above condition exists, an overflow system shall then be installed.
2) A backwater check valve shall only be used where a below ground installation is desirable and approved by the Building and Safety Department.

CITY OF THOUSAND OAKS - UTILITIES DEPARTMENT

SUBMITTED Richard Bardin

APPROVED [signature]

ADOPTED BY THE CITY COUNCIL OF THE CITY OF THOUSAND OAKS 5/8/79

DRAWN BY: B. C.

CHECKED BY:

SCALE: NONE

REVISED: 9/80

CONSTRUCTION STANDARDS

BACKWATER OVERFLOW DEVICE

PLATE NO. 29

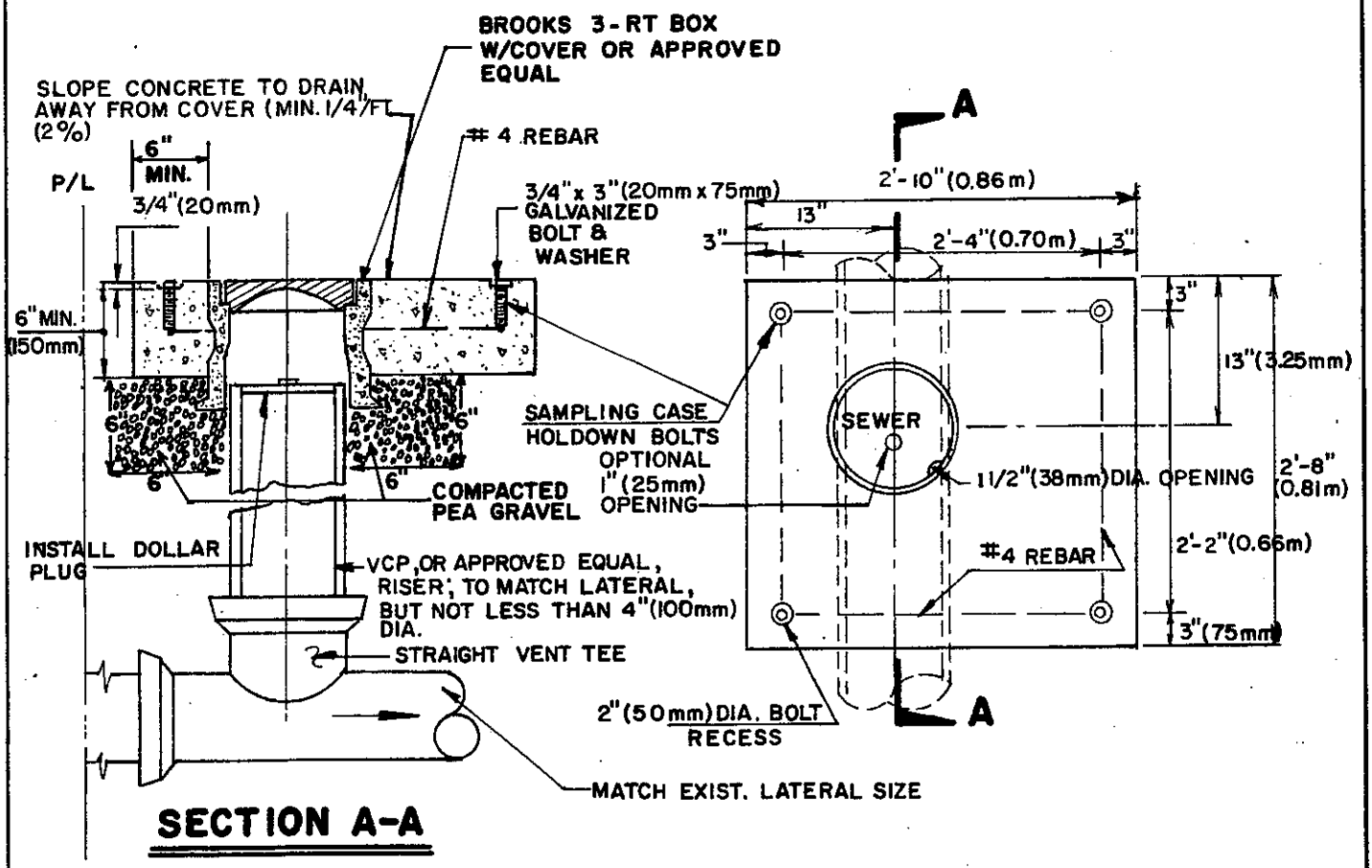

NOTES:

1. On existing sewer, install approved standard "T" Saddle, using a Sewer Tapping Machine, or equal. A plain end section of pipe with premoulded "T" and Calder Couplings may be used.

2. Location of Sampling Well shall be designated by the City of Thousand Oaks Utilities Department prior to approval and issuance of the Wastewater Permit.

3. Contact the Industrial Waste Inspector for location of sampling well, if location is not shown on approved drawings.

4. Section 2.14 of Standards discusses industrial waste discharge.

CITY OF THOUSAND OAKS - UTILITIES DEPARTMENT

SUBMITTED Richard Bardin APPROVED ADOPTED BY THE CITY COUNCIL OF THE CITY OF THOUSAND OAKS 5/8/79	DRAWN BY: R. LECHUGA CHECKED BY: J. KNIPE SCALE: NONE REVISED:	CONSTRUCTION STANDARDS SAMPLING WELL

PLATE NO. 30

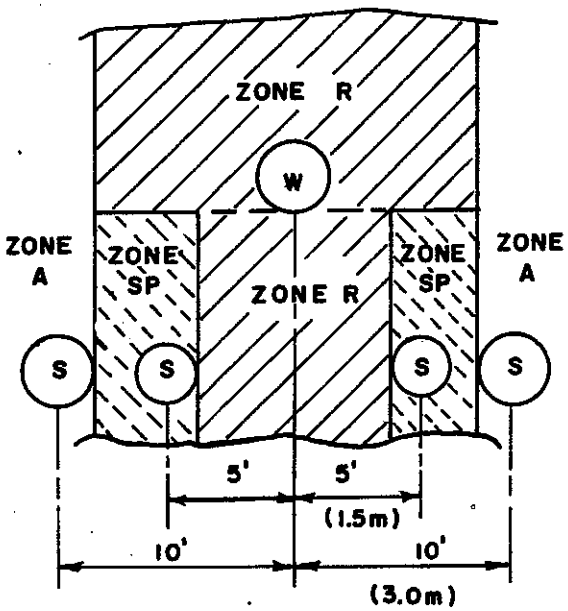

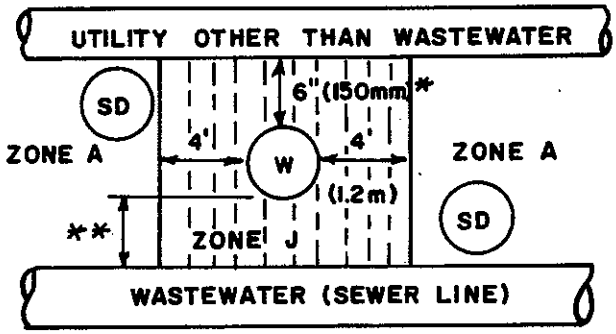

(W) = WATER LINE

(S) = WASTEWATER LINE (SEWER)

(SD) = STORM DRAIN OR OTHER UTILITIES - SEE NOTE 1 FOR PARALLEL STORM DRAIN AND SEWER

* = CLOSER LINES - SEE PLATE 12

** = 3' MAIN LINES, 2' FOR LATERALS

ZONES:

R Parallel sewers not allowed in this area

SP Special permission required to locate sewer in this area

A Acceptable zone for parallel lines - normally 10' (3.0m) on center

J No joints allowed in this area (3' (0.9m) above and below and 4' (1.2m) to sides) unless wastewater line is concrete encased per Plate 13 or Plate 12 if separation is 6" (150mm) or less.

GENERAL NOTES:

(1) Minimum distance between outsides of parallel lines (i.e. storm drain and water or sewer line) shall be 4' (1.2m) without special approval.

(2) Normally prohibited areas may be used if water line is placed in a continuous steel casing.

(3) The above requirements do not pertain to instances where water and sewer laterals are adjacent in prohibited or special permission areas and water service is continuous without joints (up to 2" only).

CITY OF THOUSAND OAKS - UTILITIES DEPARTMENT

SUBMITTED Richard Bardin

APPROVED

ADOPTED BY THE CITY COUNCIL OF THE CITY OF THOUSAND OAKS 5/8/79

DRAWN BY: B.C.

CHECKED BY:

SCALE: NONE

REVISED:

CONSTRUCTION STANDARDS

SEPARATION REQUIREMENTS FOR WATER AND WASTEWATER LINES

WASTEWATER

PLATE NO. 31

PROJECT TITLE: _____ PROJECT NO. _____

DEVELOPER: _____ DEVELOPER'S ENGINEER: _____

SUBMITTED BY: _____ R.C.E. NO. _____ DATE: _____

ITEM NO.	ITEM	QUANTITY	UNIT	UNIT * COST	ITEM COST
1.	6" Pipe - Standard depth up to 14'		L.F.	$14.00	
2.	8" Pipe - Standard depth up to 14'		L.F.	16.00	
3.	10" Pipe - Standard depth up to14'		L.F.	19.00	
4.	12" Pipe - Standard depth up to 14'		L.F.	23.00	
5.	15" Pipe - Standard depth up to 14'		L.F.	29.00	
6.	4" House laterals, per ft.		L.F.	8.00	
7.	48" dia. Manholes Pre-Cast, to 8' depth		Each	1200.00	
8.	Manhole extra depth (per foot)		V.F.	150.00	
9.	Chimney		Each	500.00	
10.	Encasement		L.F.	15.00	
11.	Concrete Trench Slab		L.F.		
12.	Special Structures		Each		
13.	Trenching, extra per L.F., per ft. depth over 14'		L.F.	2.00	
14.	Cleanout		Each	450.00	
15.	1 sack cement slurry (in existing public streets)		C.Y.		
16.	A.C. pavement restoration		S.F.		
	Additional Items (See attached sheet)				

*Unit costs are for establishing a cost estimate prior to construction and fees.
A cost summary shall be submitted after construction to establish actual value of facilities.

Multiplier Factor M.F.

Basic Index: ENR (L.A.) 5667 (June 1988)

Current Index: ENR (L.A.) _____ (_____ 19 ____)

M.F. = Current Index / 5667 −1.00 M.F. = _____

For computation of fees, see plate 31 A

Sub-Total	
Add: Sub Total X M.F.	
Total	
Add: 10% Contingency	
Grand Total	

CITY OF THOUSAND OAKS - UTILITIES DEPARTMENT

SUBMITTED _____

APPROVED _____

ADOPTED BY THE CITY COUNCIL OF THE CITY OF THOUSAND OAKS _____

DRAWN BY:

CHECKED BY:

SCALE: N/A

REVISED: 6-88

CONSTRUCTION STANDARDS

UNIT COSTS FOR ESTIMATING AND COMPUTATION OF FEES

PLATE 31 A

COMPUTATION OF WASTEWATER FEES

Grand total from front side: $ _____

Plan check fees: .03 x $ _____ (Grand Total) = $ _____

Inspection fees:

.05 x $ _____ (1st $100,000 or less) = $ _____

.03 x $ _____ (next $250,000) = $ _____

.02 x $ _____ (amount over $350,000) = $ _____

Total Inspection fee $ _____

Plan Check plus inspection fee $ _____

Rev. April '91

PLATE NO. 32

NOTES:
1. THE EQUIPMENT SHOWN ON THIS PLATE IS INTENDED FOR SINGLE FAMILY DWELLINGS SUBJECT TO PRIOR APPROVAL & LIMITED USE AS DISCUSSED IN SECTION 2-12
2. SPECIFIC EQUIPMENT TYPES SHALL BE APPROVED BY THE UTILITIES DEPARTMENT INSPECTION OF ON-SITE WORK WILL BE BY THE BUILDING & SAFETY DEPARTMENT

CITY OF THOUSAND OAKS - UTILITIES DEPARTMENT

SUBMITTED Richard Gordin

APPROVED

ADOPTED BY THE CITY COUNCIL OF THE CITY OF THOUSAND OAKS _____

DRAWN BY: MHY
CHECKED BY:
SCALE: NONE
REVISED:

CONSTRUCTION STANDARDS

PRIVATE PUMPING SYSTEMS

PARKWAYS, MEDIANS, OPEN GROUND

REVISION _____ DATE

PLATE F-4
UNDER PAVEMENT

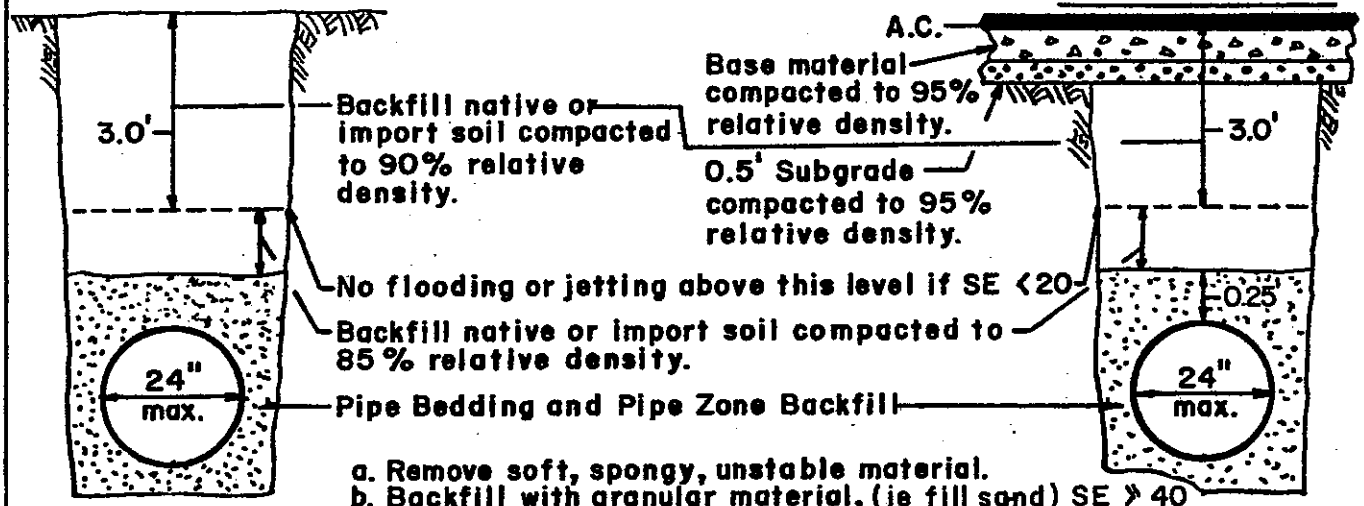

a. Remove soft, spongy, unstable material.
b. Backfill with granular material, (ie fill sand) SE > 40
c. Compact backfill material to eliminate voids.
d. For sewer pipe provide bedding per City of Thousand Oaks Utilities Dept. Standards.
e. Compaction tests not required if fill sand is packed in place.

MAXIMUM LIFTS

a. Mechanical Compaction
- Hydrohammer 3.00'
  - Caution should be exercised in using hydrohammer when the cover over the pipe is less than 4.0'.
- Vibratory 2.00'
- Rolling stock 1.00'
- Hand tamper 0.33'

b. Hydraulic Densification
- Flooding and puddling 7.00'
- Jetting under pressure 7.00'

Note – Bedding must be free draining if fill is not.

CONTROL of COMPACTION

Visual inspection confirmed by tests in the lower portion of each lift. *

FOR ROCKFILLS

Sufficient sand and fines must be flooded into the backfill to fill the voids.
Control by visual inspection.
Maximum size rock in fill 6 inches.
Broken P.C.C. and A.C. allowed in native backfill only, with 6 inch maximum size.

PAVEMENT STRUCTURAL SECTION

1. On city projects:
   a. Construct in accordance with plans and specification.
2. On land development projects:
   a. Construct in accordance with plans, City of Thousand Oaks Standard Land Development Specifications, and Road Standards.
   b. Contractor placing pavement structural section shall compact material in this zone.
3. On encroachment permit projects:
   a. Replace structural section as follows
      A.C. – One (1) inch more than existing thickness but not less than two (2) inches.
      Base – Same type and thickness as existing base material.
   b. Construct in accordance with the City of Thousand Oaks Standard Land Development Specification.

FOR UTILITY TRENCHES ONLY

This standard applies to pipes and conduits of 24" max. inside dia. or 30" max. outside width, used for utility purposes.

* A lift is one layer of material placed, processed, and compacted as a unit. If a lift is thicker than one (1) foot, the "lower portion" is below the mid point of said lift.

NOTE: THIS PLATE IS INCLUDED FOR INFORMATION. PUBLIC WORKS DEPARTMENT SHOULD BE CONSULTED FOR SPECIFIC APPROVALS AND INSPECTION.

SUBMITTED A C Johnson 12-20-76 DATE	CITY OF THOUSAND OAKS DEPARTMENT OF PUBLIC WORKS
APPROVED J Louis Scheer 12-21-76 DIRECTOR OF PUBLIC WORKS DATE	UTILITY TRENCHES COMPACTION SPECIFICATIONS
ADOPTED BY CITY COUNCIL 12-21-76 BY RESOLUTION NO. 76-391	

Reference – Ventura County Standard Design No. 45-3 Adopted 2-16-68

UTILITIES PLATE 34

REVISION 3-1-80
DATE

PUBLIC WORKS PLATE F-7

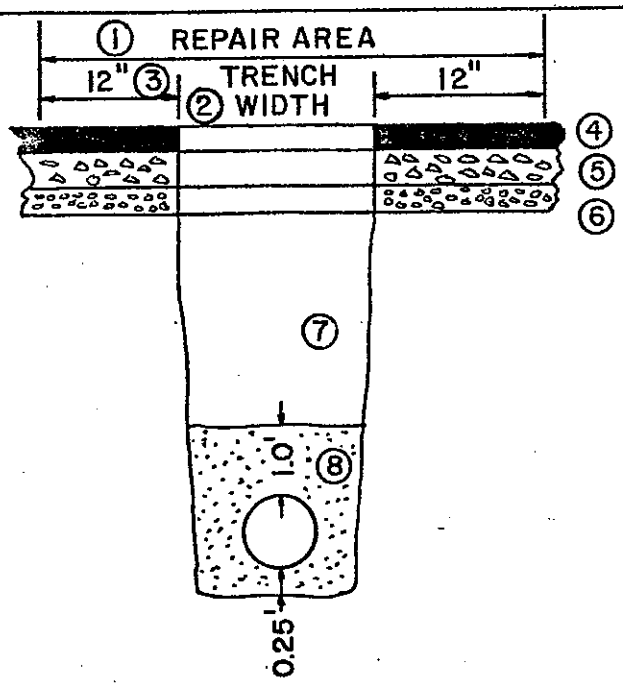

STRUCTURAL SECTION

① Repair area to be saw cut 12" beyond trench excavation 4' min. A.C.

② Trench width varies.

③ Asphalt to be removed 12" beyond trench excavation on either side.

④ Replace A.C. 1" greater than existing - min. 3"

⑤ A-B match existing - replace only within trench excavation unless specified by Inspector - min. 6" Cl. II A-B

⑥ Sub-grade to be compacted to 95% relative density - 12"

⑦ Trench backfill to be native material or import soil (if native is unsuitable) one (1) foot above pipe

⑧ Pipe bedding and pipe zone backfill per pipe owner's and/or City specifications

a. Remove soft, spongy, unsuitable material

b. Backfill with granular material, (ie fill sand)

c. Compact backfill material to eliminate voids. No jetting, unless specified by Inspector

d. For wastewater pipe provide bedding per City of Thousand Oaks Utilities Department Standards

e. Compaction test required unless so stated by Public Works Inspector

MAXIMUM LIFTS

a. Mechanical Compaction

Hydrohammer	3.00'
Caution should be exercised in using hydrohammer when the cover over the pipe is less than 4.0'.	
Vibratory	2.00'
Rolling stock	1.00'
Hand tamper	0.33'

b. Hydraulic Densification (Only when specified by Inspector)

Flooding and puddling	7.00'
Jetting under pressure	7.00'

Note - Bedding must be free draining if fill is not.

NOTE: A lift is one layer of material placed, processed, and compacted as a unit. If a lift is thicker than one (1) foot, the "lower portion" is below the mid point of said lift.

SUBMITTED Steven Burke 3-1-80 DATE	CITY OF THOUSAND OAKS DEPARTMENT OF PUBLIC WORKS
APPROVED R. Louis Scherer 3-1-80 DIRECTOR OF PUBLIC WORKS DATE	TRENCH REPAIR WITHIN PAVED RIGHT OF WAY
ADOPTED BY CITY COUNCIL 12-21-76 BY RESOLUTION NO. 76-391	

See Plate F-4 Utility Trenches Compaction Specifications